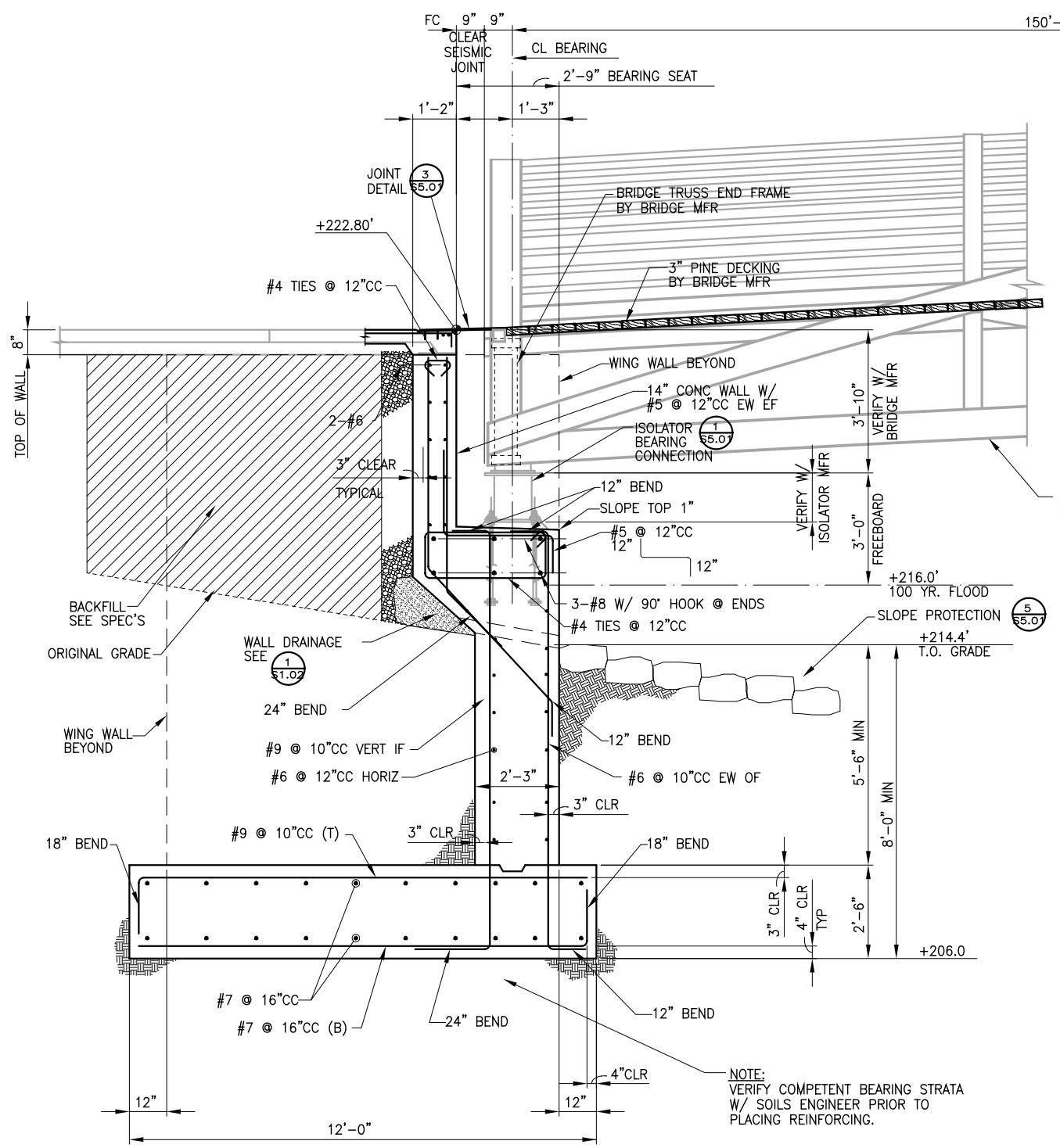

A S4.01 **SECTION**

1/2"=1'-0"

NORTH ABUTMENT PEDESTRIAN BRIDGE

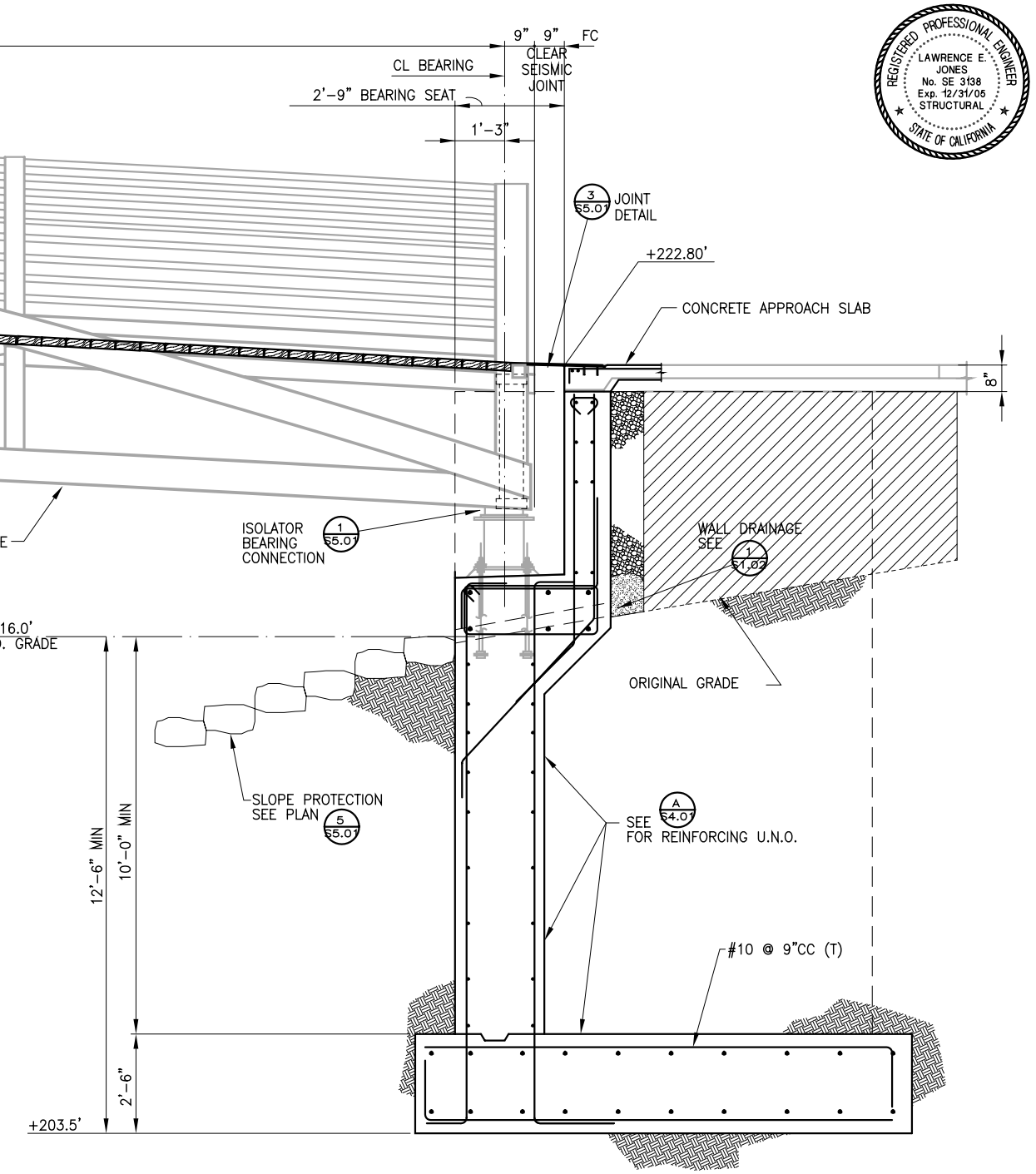

A S4.01 **SECTION**

1/2"=1'-0"

SOUTH ABUTMENT PEDESTRIAN BRIDGE

Buehler & Buehler Structural Engineers, Inc.
600 Q Street, Suite 200, Sacramento, CA 95814
tel 916.443.2323 fax 916.443.2313

REGISTERED PROFESSIONAL ENGINEER
LAWRENCE E. JONES
No. SE 3138
Exp. 12/31/05
STRUCTURAL
STATE OF CALIFORNIA

CALIFORNIA STATE PARKS SINCE 1864

ACQUISITION AND DEVELOPMENT DIVISION
One Capitol Mall
Suite 500
Sacramento, CA
95814-3229

DESIGNED
DRAWN MAR
CHECKED LEJ

REVISIONS	
△	DATE
.	.
.	.

PFEIFFER BIG SUR STATE PARK
PEDESTRIAN BRIDGE SECTIONS
ENTRANCE AND DAY USE DEVELOPMENT

DRAWING NO.
.

SHEET NO.
S4.01
OF
.

100% AGENCY REVIEW SET 5/14/04

F:\301-34409\S4-01.dwg 06/04/04 3:34:54pm BB HarryCo