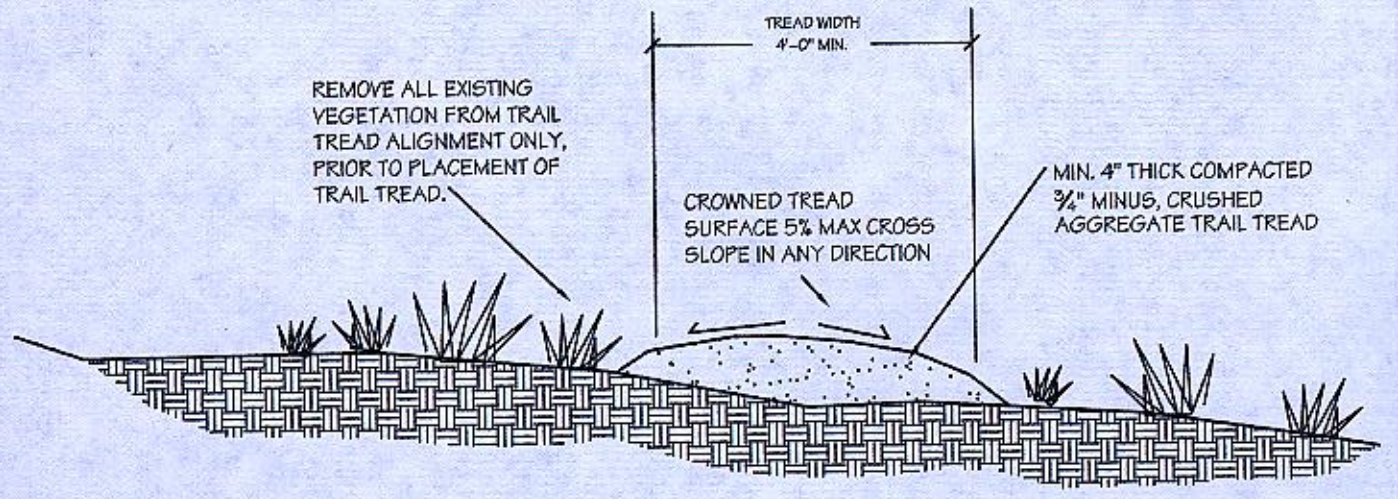

TURNPIKE TRAIL SECTION – NEAR LEVEL GROUND

NOT TO SCALE

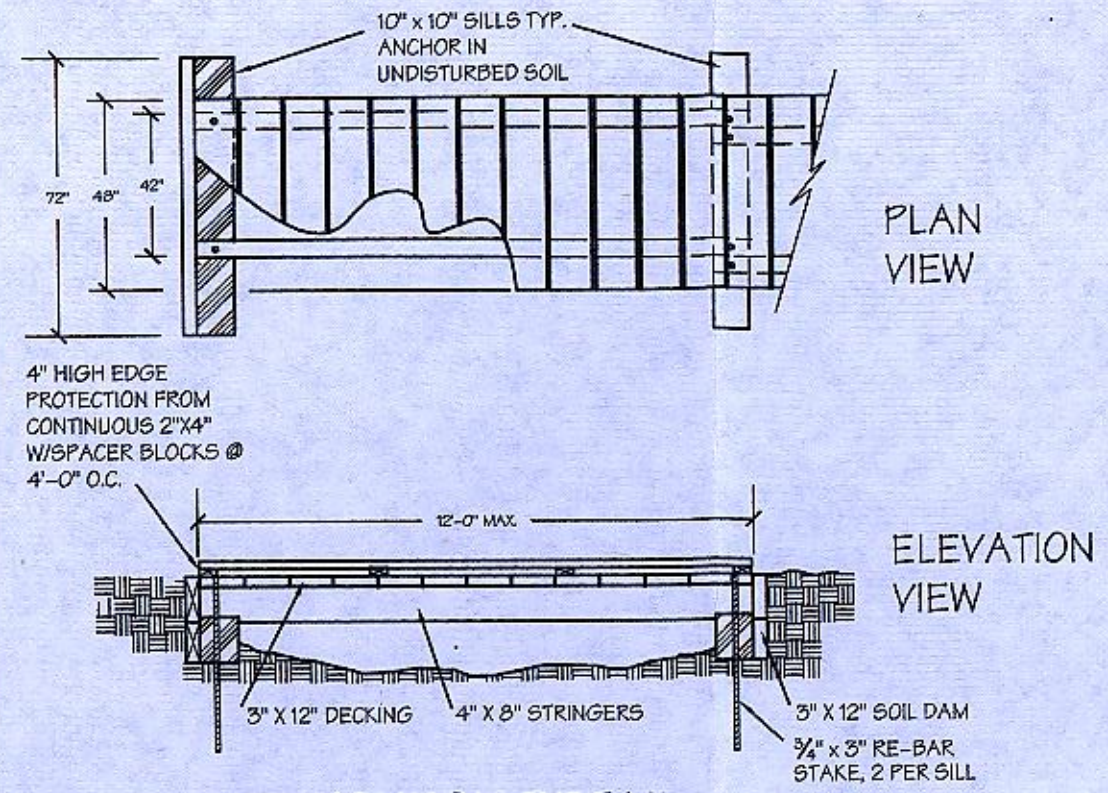

PUNCHEON DETAIL

NOT TO SCALE

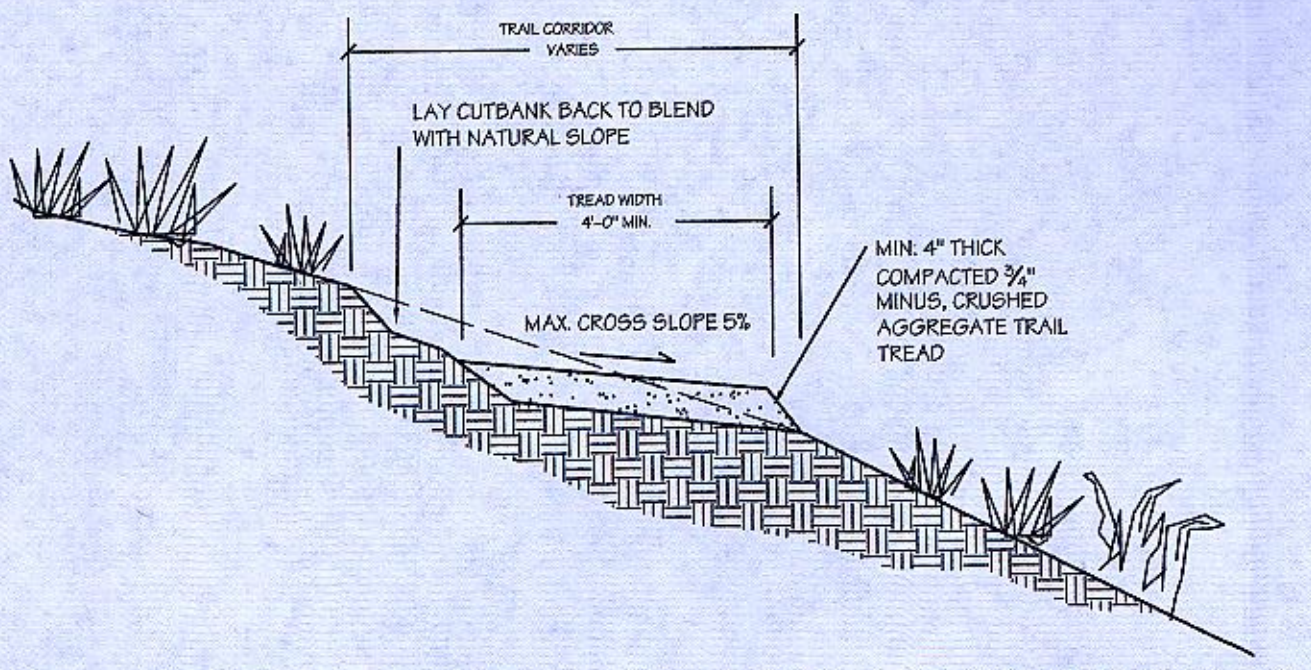

FULL BENCH TRAIL SECTION – ON CROSS SLOPES OVER 5%

NOT TO SCALE

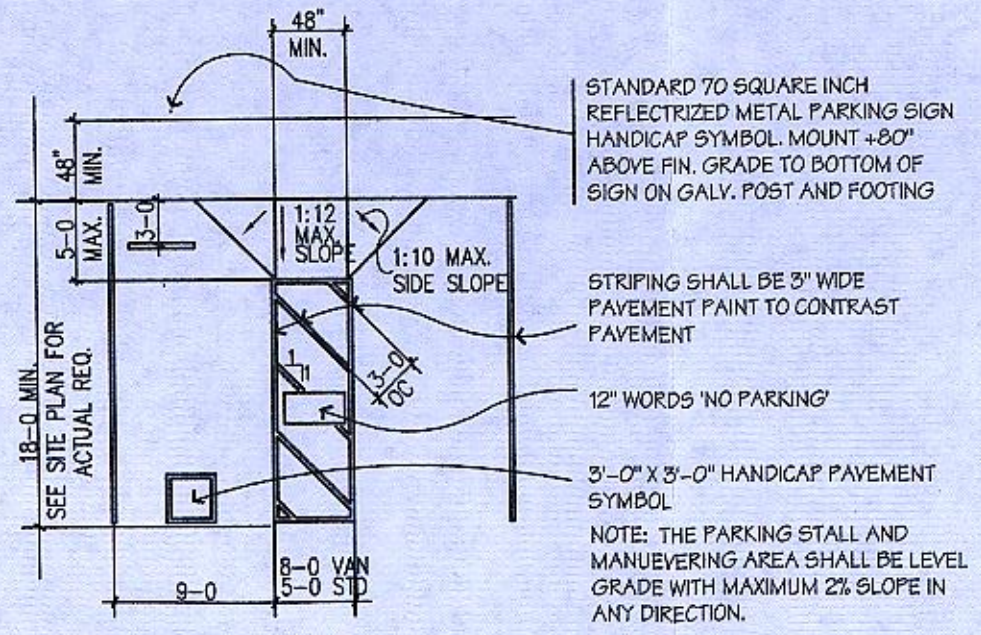

NOTE: THE PARKING STALL AND MANUEVERING AREA SHALL BE LEVEL GRADE WITH MAXIMUM 2% SLOPE IN ANY DIRECTION.

ACCESSIBLE PARKING STALL DETAIL

NOT TO SCALE

CALIFORNIA STATE PARKS SINCE 1864

RUSSIAN RIVER DISTRICT
P.O. Box 123
Duncans Mills, CA
95430

DESIGNED	TRAIL CREW
DRAWN	G. SHANNON
CHECKED	

REVISIONS	DATE
ORIGINAL	2/2006

SOMOMA COAST STATE BEACH

BODEGA HEAD NATURE TRAIL DETAILS

DRAWING NO. 657-0150

SHEET NO. 2 OF 2