DRAWING DATE: 09/24/04 PROJECT NAME: Rehabilitation PROJECT PHASE: 100% Construction Documents Plotted: Friday September 24, 2004 1:05pm by greide File Name: 4-6.dwg

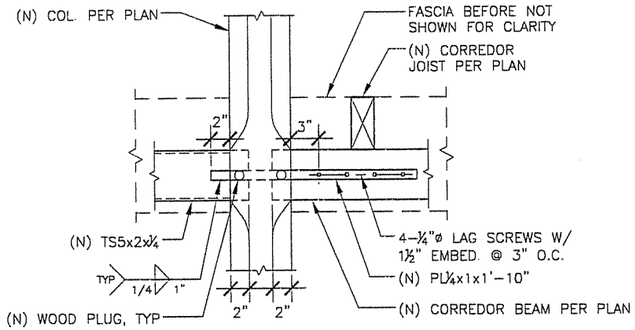

1 TS BEAM / COL. CONN. @ CORREDOR

SCALE: 1 1/2" = 1'-0" FOR 22"X34" SHEET
SCALE: 3/4" = 1'-0" FOR 11"X17" SHEET

0 4" 8" 2'-0"

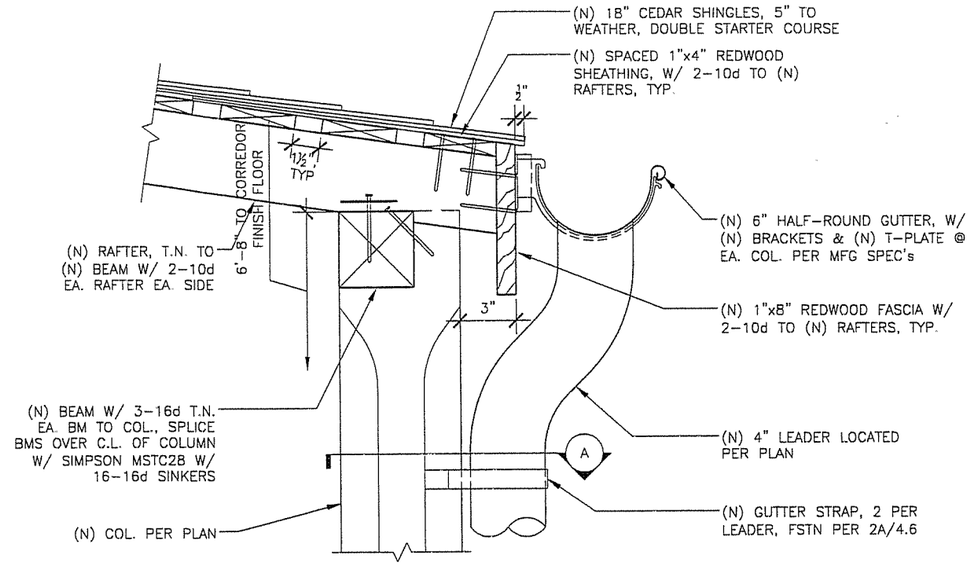

2 COL. @ CORREDOR ROOF

SCALE: 3" = 1'-0" FOR 22"X34" SHEET
SCALE: 1 1/2" = 1'-0" FOR 11"X17" SHEET

0 1" 2" 6"

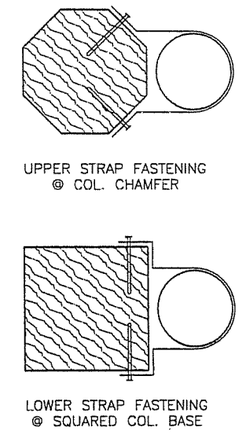

A LEADER ATTACHMENT - PLAN

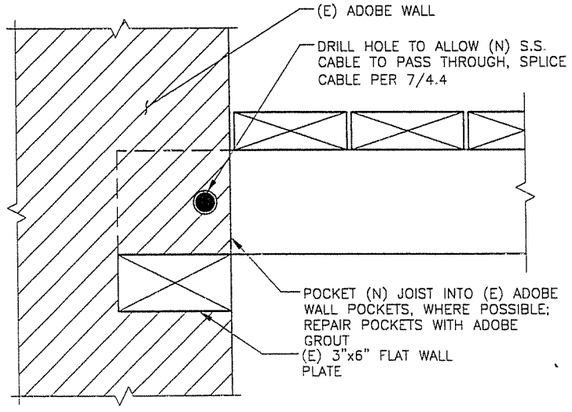

3 JOIST @ ADOBE WALL

SCALE: 3" = 1'-0" FOR 22"X34" SHEET
SCALE: 1 1/2" = 1'-0" FOR 11"X17" SHEET

0 1" 2" 6"

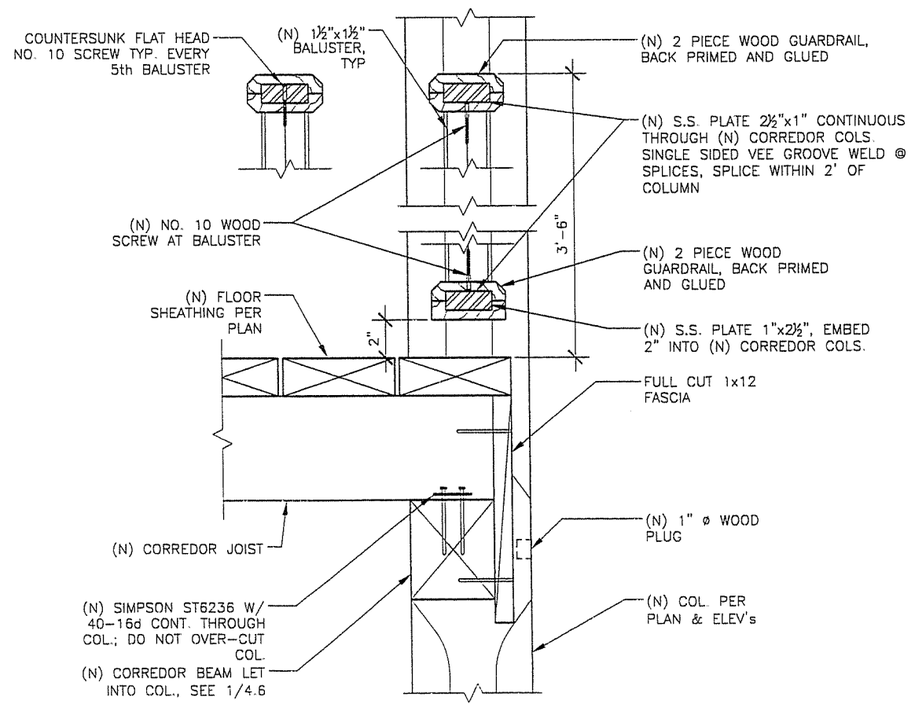

4 COL. @ CORREDOR F.F. & RAILING

SCALE: 3" = 1'-0" FOR 22"X34" SHEET
SCALE: 1 1/2" = 1'-0" FOR 11"X17" SHEET

0 1" 2" 6"

LICENSED ARCHITECT — VERONICA MARIE GUILMARTIN — No. C 16981 — REN ____ — STATE OF CALIFORNIA

REGISTERED PROFESSIONAL ENGINEER — UNA M. GILMARTIN — No. C055585 — Exp ____ — CIVIL — STATE OF CALIFORNIA

DSA/DPR MOU * 8.01 ACCESSIBILITY REVIEW	CALIFORNIA STATE FIRE MARSHALL-APPROVED
CERTIFICATION # _____	Approval of this plan does not authorize or approve any omission of deviation from applicable regulations. Final approval is subject to field inspection. One set of approved plans shall be available on the project site at all times.
REVIEWER: DATE:	Reviewed by Date

ACCESSIBILITY COMPLIANCE AND STATE FIRE MARSHALL APPROVAL ON FILE WITH THE DEPARTMENT OF PARKS AND RECREATION

CALIFORNIA STATE PARKS SINCE 1864

CENTRAL SERVICE CENTER
21 Lower Ragsdale Drive
Monterey, CA 93940

DESIGNED	UMG
DRAWN	GDR
CHECKED	UMG

REVISIONS	DATE
	9-24-04

CONSULTANT:

WJE ENGINEERS ARCHITECTS MATERIAL SCIENTISTS
Wiss, Janney, Elstner Associates, Inc.
2320 Powell Street, Suite 325
Emeryville, CA 94608
510.428-3007 tel | 510.428-0488 fax

Glassworks | Laboratories | Northbrook, Illinois
Atlanta | Austin | Boston | Chicago | Cincinnati | Cleveland | Dallas | Denver | Houston | Los Angeles | Memphis | Minneapolis | New York | Pittsburgh | San Antonio | Southeast Florida LLC

Santa Cruz District, 184 Old Adobe Road, Watsonville, CA 94076

Rancho San Andres Castro Adobe
Corredor Framing Details
Rehabilitation

DRAWING NO. 29488.016

SHEET NO. 4.6

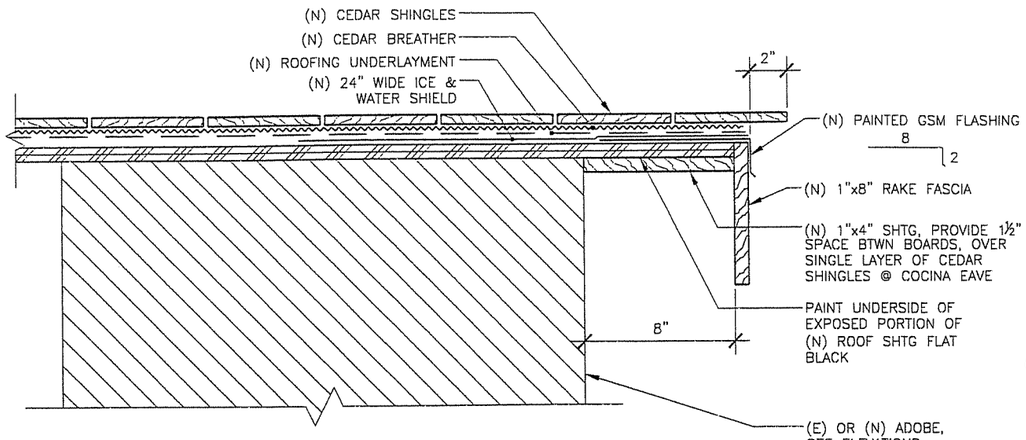

1 RAKE @ MAIN ROOF
SCALE: 3" = 1'-0" FOR 22"X34" SHEET
SCALE: 1 1/2" = 1'-0" FOR 11"X17" SHEET
0 1" 2" 6"

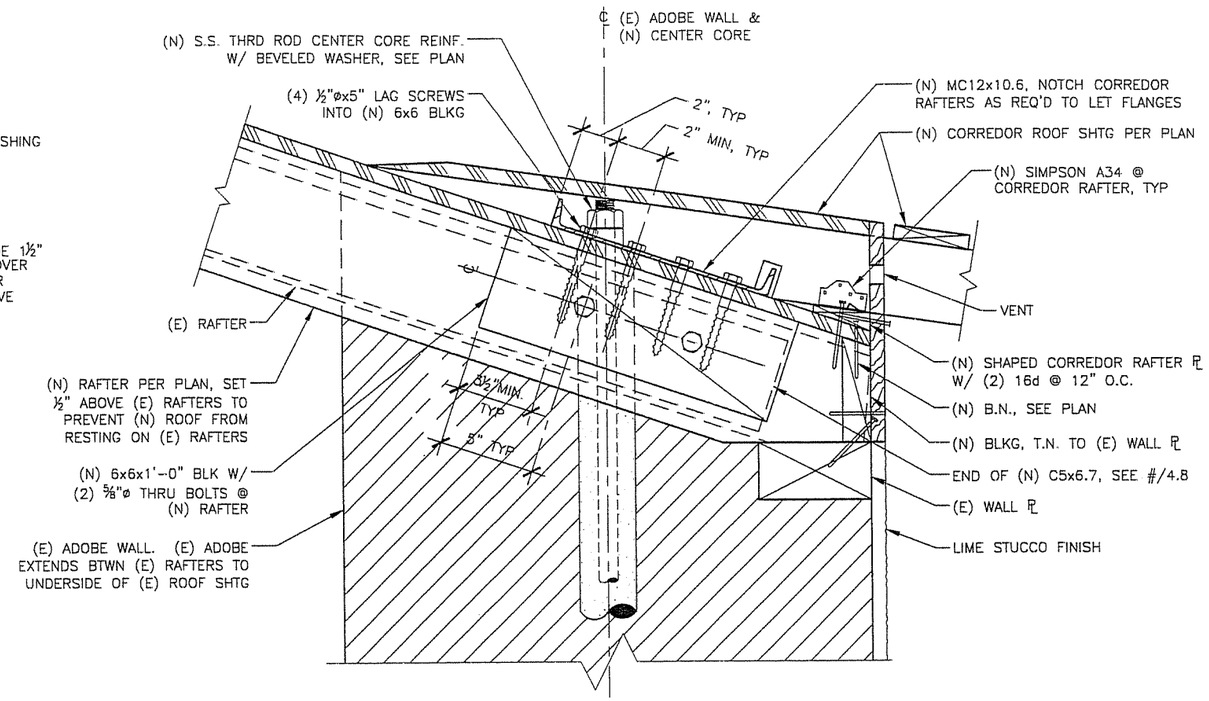

2 (N) CENTER CORE CONN. TO (N) ROOF
SCALE: 3" = 1'-0" FOR 22"X34" SHEET
SCALE: 1 1/2" = 1'-0" FOR 11"X17" SHEET
0 1" 2" 6"

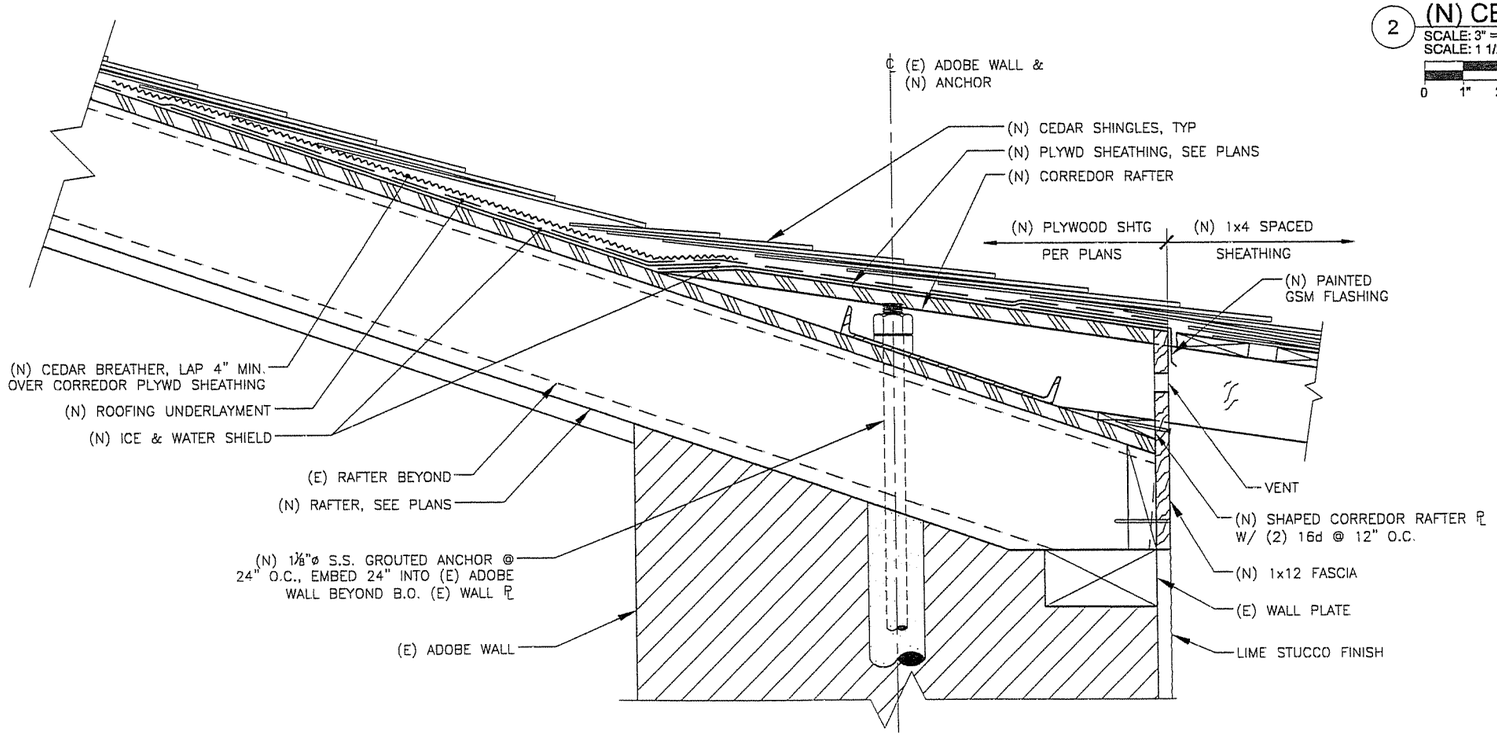

3 ROOF TRANSITION
SCALE: 3" = 1'-0" FOR 22"X34" SHEET
SCALE: 1 1/2" = 1'-0" FOR 11"X17" SHEET
0 1" 2" 6"

LICENSED ARCHITECT — VERONICA MARIE DIAZ MARTIN — No. C 16981 — REN. ____ — STATE OF CALIFORNIA

REGISTERED PROFESSIONAL ENGINEER — UMA M. GILLMARTIN — No. C055585 — Exp. ____ — CIVIL — STATE OF CALIFORNIA

DSA/DPR MOU * 8.01 ACCESSIBILITY REVIEW	CALIFORNIA STATE FIRE MARSHALL-APPROVED
CERTIFICATION # _____	Approval of this plan does not authorize or approve any omission of deviation from applicable regulations. Final approval is subject to field inspection. One set of approved plans shall be available on the project site at all times.
REVIEWER: DATE:	Reviewed by Date

ACCESSIBILITY COMPLIANCE AND STATE FIRE MARSHALL APPROVAL ON FILE WITH THE DEPARTMENT OF PARKS AND RECREATION

CALIFORNIA STATE PARKS SINCE 1864

CENTRAL SERVICE CENTER
21 Lower Ragsdale Drive
Monterey, CA 93940

DESIGNED UMG
DRAWN GDR
CHECKED UMG

REVISIONS	DATE
	9-24-04

CONSULTANT:
WJE ENGINEERS ARCHITECTS MATERIAL SCIENTISTS
Wiss, Janney, Elstner Associates, Inc.
2200 Powell Street, Suite 825
Emeryville, CA 94608
510.428-2501 tel | 510.428-0428 fax

Santa Cruz District, 184 Old Adobe Road, Watsonville, CA 94076

Rancho San Andres Castro Adobe
Main Roof Details
Rehabilitation

DRAWING NO. 29488.017

SHEET NO. 4.7

17 OF 20

DRAWING DATE: 09/24/04 PROJECT NAME: Rehabilitation PROJECT PHASE: 100% Construction Documents Plotted: Friday September 24, 2004 1:06pm by greide File Name: 4-7.dwg

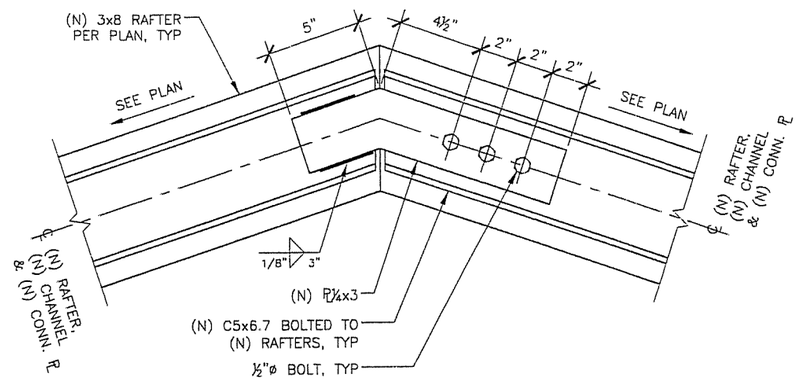

1 (N) RAFTER CONN. @ MAIN ROOF RIDGE

SCALE: 3" = 1'-0" FOR 22"X34" SHEET
SCALE: 1 1/2" = 1'-0" FOR 11"X17" SHEET

0 1" 2" 6"

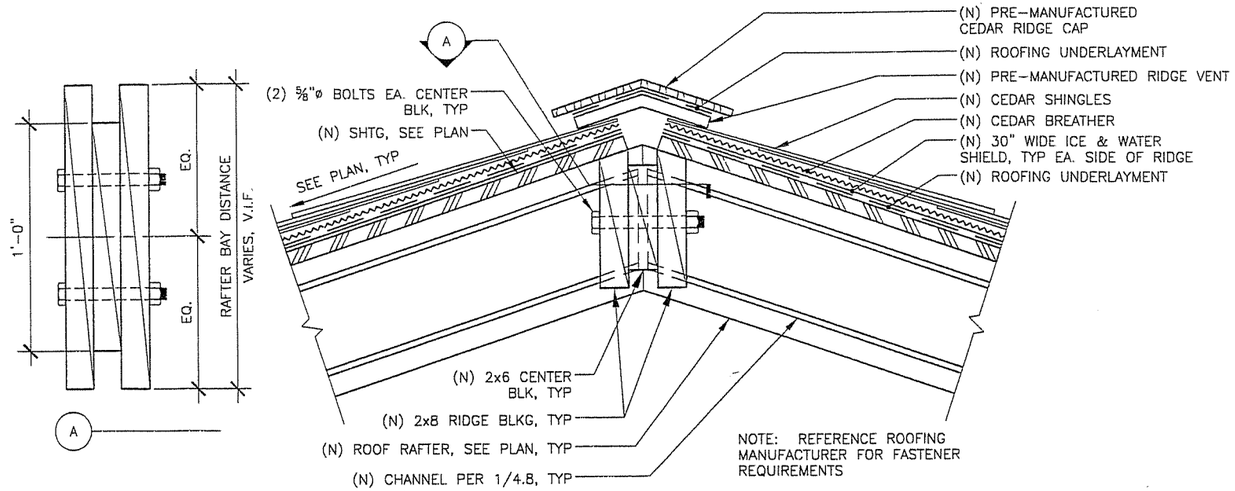

2 MAIN ROOF RIDGE BLKG & ROOFING

SCALE: 3" = 1'-0" FOR 22"X34" SHEET
SCALE: 1 1/2" = 1'-0" FOR 11"X17" SHEET

0 1" 2" 6"

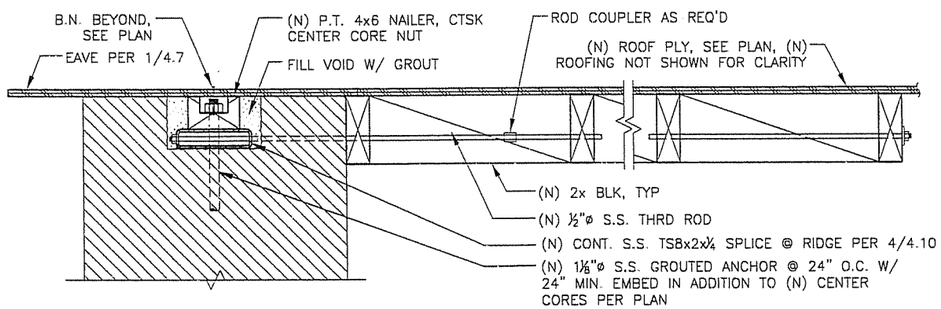

3 (N) RAFTER CONN. TO (E) ADOBE WALL @ MAIN ROOF - RAFTERS PARALLEL

SCALE: 1 1/2" = 1'-0" FOR 22"X34" SHEET
SCALE: 3/4" = 1'-0" FOR 11"X17" SHEET

0 2" 4" 12"

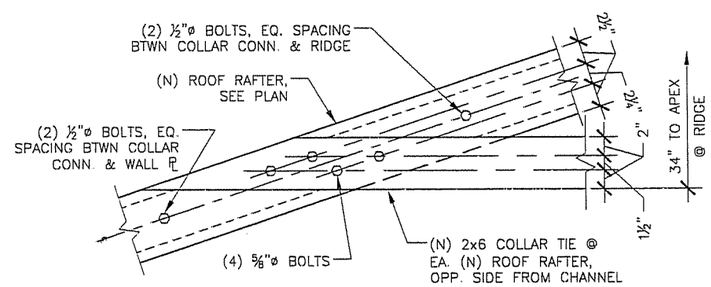

4 (N) MAIN ROOF COLLAR TIE CONN.

SCALE: 1 1/2" = 1'-0" FOR 22"X34" SHEET
SCALE: 3/4" = 1'-0" FOR 11"X17" SHEET

0 2" 4" 12"

LICENSED ARCHITECT — VERONICA MARIE QUINN MARTIN — No. C 16981 — REN. ____ — STATE OF CALIFORNIA

REGISTERED PROFESSIONAL ENGINEER — UNA M. GILMARTIN — No. C055585 — Exp. ____ — CIVIL — STATE OF CALIFORNIA

DSA/DPR MOU * 8.01 ACCESSIBILITY REVIEW	CALIFORNIA STATE FIRE MARSHALL-APPROVED
CERTIFICATION # _____	Approval of this plan does not authorize or approve any omission of deviation from applicable regulations. Final approval is subject to field inspection. One set of approved plans shall be available on the project site at all times.
REVIEWER: DATE:	Reviewed by Date

ACCESSIBILITY COMPLIANCE AND STATE FIRE MARSHALL APPROVAL ON FILE WITH THE DEPARTMENT OF PARKS AND RECREATION

CALIFORNIA STATE PARKS SINCE 1864

CENTRAL SERVICE CENTER
21 Lower Ragsdale Drive
Monterey, CA 93940

DESIGNED	UMG
DRAWN	GDR
CHECKED	UMG

REVISIONS	DATE
	9-24-04

CONSULTANT:

WJE STRUCTURAL ENGINEERS ARCHITECTS MATERIAL SCIENTISTS
Wiss, Janney, Elstner Associates, Inc.
2200 Powell Street, Suite 925
Emeryville, CA 94608
510.428-2927 tel | 510.428-0908 fax

Santa Cruz District, 184 Old Adobe Road, Watsonville, CA 94076

Rancho San Andres Castro Adobe

Main Roof Details

Rehabilitation

DRAWING NO. 29488.018

SHEET NO. 4.8

18 OF 20

DRAWING DATE: 09/24/04 PROJECT NAME: Rehabilitation PROJECT PHASE: 100% Construction Documents Plotted: Friday September 24, 2004 1:06pm by greide File Name: 4-8.dwg

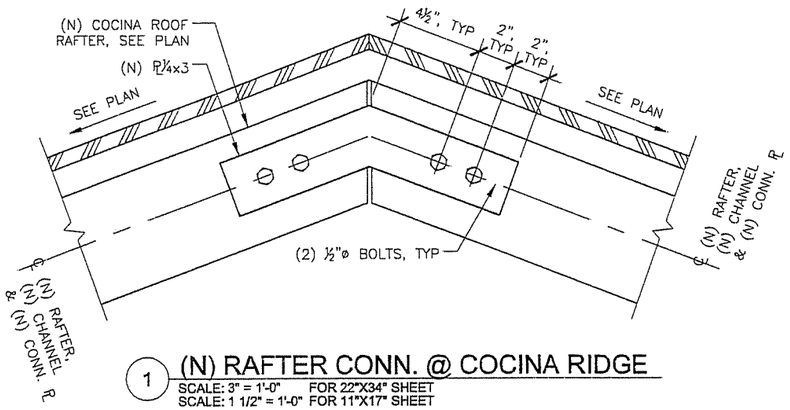

1 (N) RAFTER CONN. @ COCINA RIDGE

SCALE: 3" = 1'-0" FOR 22"X34" SHEET
SCALE: 1 1/2" = 1'-0" FOR 11"X17" SHEET

0 1" 2" 6"

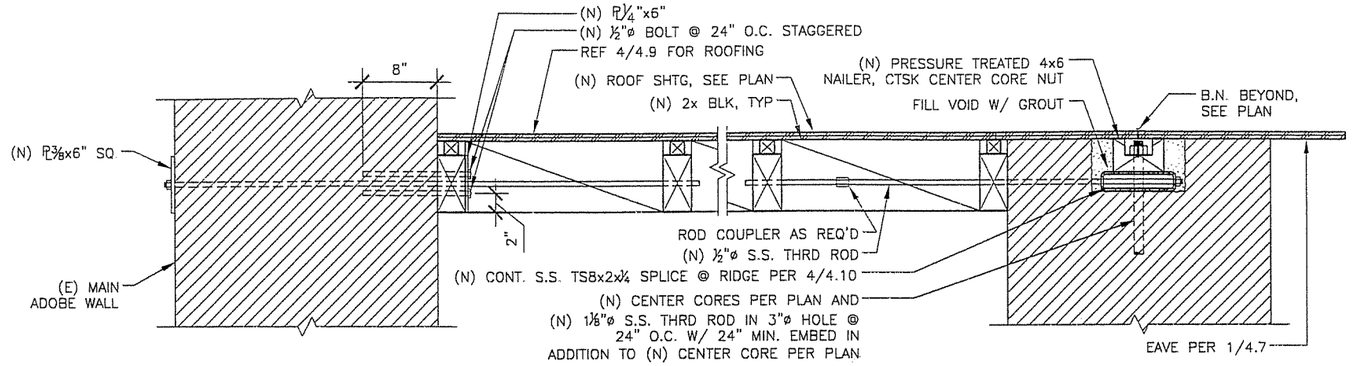

2 (N) RAFTER CONN. TO (E) ADOBE WALLS @ COCINA ROOF - RAFTERS PARALLEL

SCALE: 1 1/2" = 1'-0" FOR 22"X34" SHEET
SCALE: 3/4" = 1'-0" FOR 11"X17" SHEET

0 2" 4" 12"

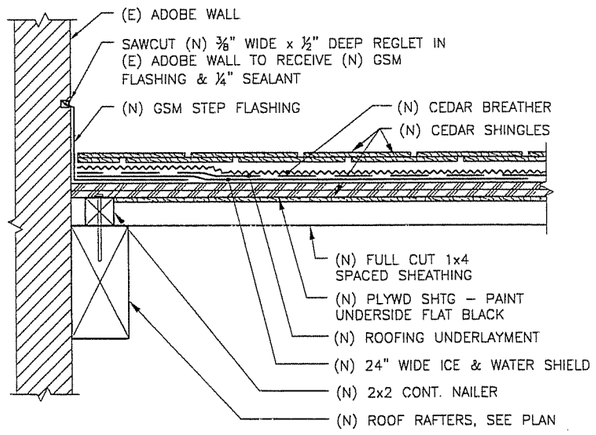

3 STEP FLASHING @ COCINA ROOF

SCALE: 3" = 1'-0" FOR 22"X34" SHEET
SCALE: 1 1/2" = 1'-0" FOR 11"X17" SHEET

0 1" 2" 6"

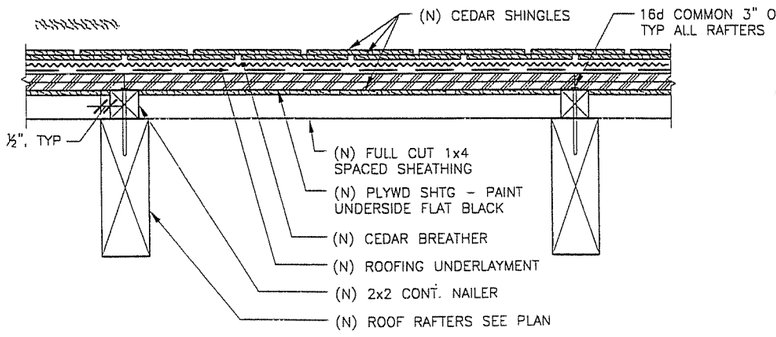

4 ROOFING @ COCINA

SCALE: 3" = 1'-0" FOR 22"X34" SHEET
SCALE: 1 1/2" = 1'-0" FOR 11"X17" SHEET

0 1" 2" 6"

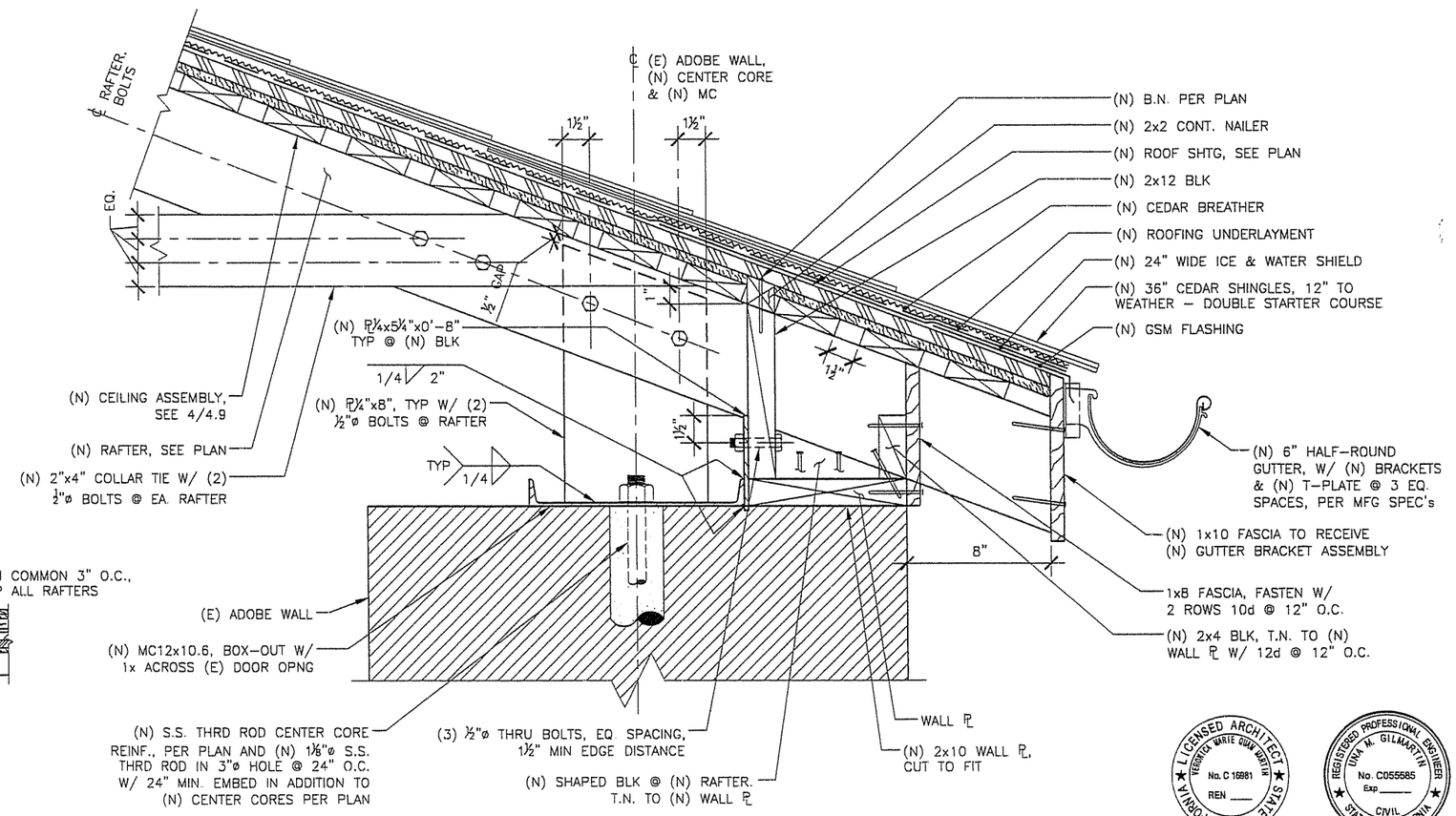

5 (N) CENTER CORE CONN. @ COCINA

SCALE: 3" = 1'-0" FOR 22"X34" SHEET
SCALE: 1 1/2" = 1'-0" FOR 11"X17" SHEET

0 1" 2" 6"

LICENSED ARCHITECT — VERONICA MARIE DUNN MARTIN — No. C 16981 — REN ____ — STATE OF CALIFORNIA

REGISTERED PROFESSIONAL ENGINEER — DANA M. GILMARTIN — No. C055585 — Exp. ____ — CIVIL — STATE OF CALIFORNIA

DSA/DPR MOU * 8.01 ACCESSIBILITY REVIEW CERTIFICATION # _____	CALIFORNIA STATE FIRE MARSHALL-APPROVED Approval of this plan does not authorize or approve any omission of deviation from applicable regulations. Final approval is subject to field inspection. One set of approved plans shall be available on the project site at all times.
REVIEWER: DATE:	Reviewed by Date

ACCESSIBILITY COMPLIANCE AND STATE FIRE MARSHALL APPROVAL ON FILE WITH THE DEPARTMENT OF PARKS AND RECREATION

CALIFORNIA STATE PARKS SINCE 1864

CENTRAL SERVICE CENTER
21 Lower Ragsdale Drive
Monterey, CA 93940

DESIGNED	UMG
DRAWN	GDR
CHECKED	UMG

REVISIONS	DATE
	9-24-04

CONSULTANT:

WJE ENGINEERS ARCHITECTS MATERIAL SCIENTISTS
Wiss, Janney, Elstner Associates, Inc.
2200 Powell Street, Suite 825
Emeryville, CA 94608
510.428.2997 tel | 510.428.9128 fax
Headquarters & Laboratory | Northbrook, Illinois
Atlanta | Austin | Boston | Chicago | Cincinnati | Detroit/Southfield | Houston | Kansas City | Los Angeles | Nashville | Orlando/Maitland | New York | Princeton | San Francisco | Seattle/Bellevue, LLC

Santa Cruz District, 184 Old Adobe Road, Watsonville, CA 94076

Rancho San Andres Castro Adobe

Cocina Roof Details

Rehabilitation

DRAWING NO. 29488.019

SHEET NO. 4.9

19 OF 20

DRAWING DATE: 09/24/04 PROJECT NAME: Rehabilitation PROJECT PHASE: 100% Construction Documents Plotted: Friday September 24, 2004 1:06pm by greide File Name: 4-9.dwg

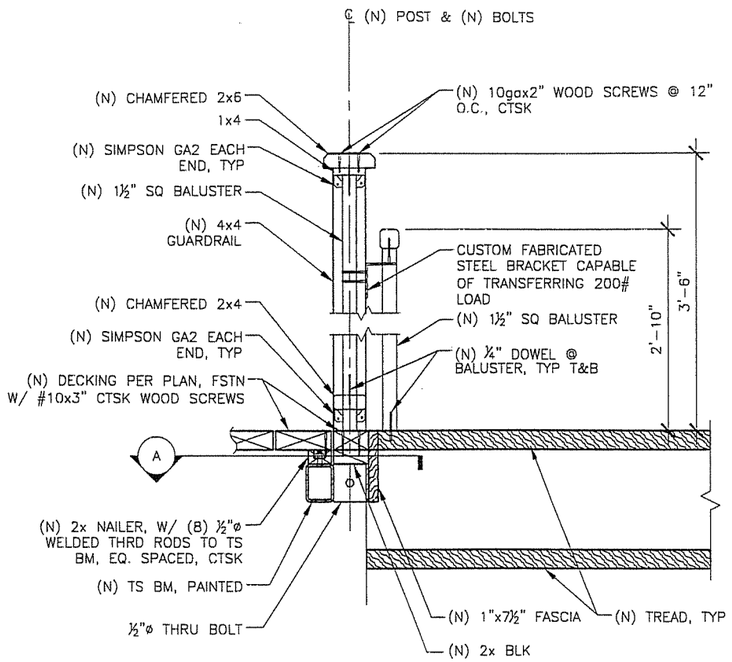

1 SECTION @ TOP OF STAIR
SCALE: 1 1/2" = 1'-0" FOR 22"X34" SHEET
SCALE: 3/4" = 1'-0" FOR 11"X17" SHEET
0 4" 8" 2'-0"

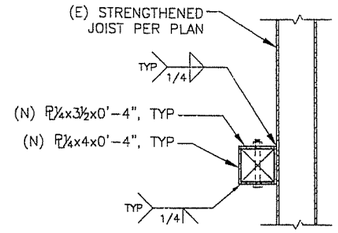

POST CONN. @ INT. STAIR

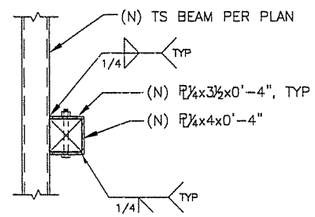

POST CONN. @ EXT. STAIR

A PLAN

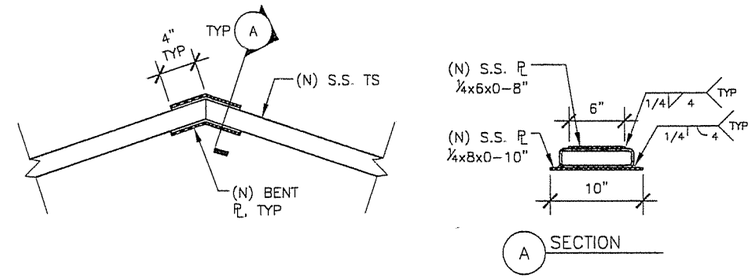

4 TUBE SPLICE CONN.
SCALE: 1 1/2" = 1'-0" FOR 22"X34" SHEET
SCALE: 3/4" = 1'-0" FOR 11"X17" SHEET
0 4" 8" 2'-0"

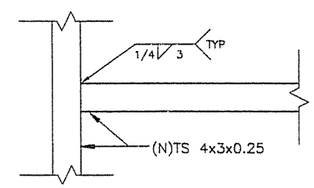

3 TUBE CONN. @ STAIR - PLAN
SCALE: 1 1/2" = 1'-0" FOR 22"X34" SHEET
SCALE: 3/4" = 1'-0" FOR 11"X17" SHEET
0 4" 8" 2'-0"

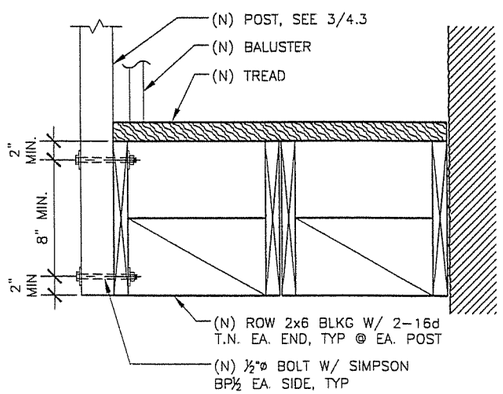

2 HANDRAIL POST / STRINGER CONN.
SCALE: 1 1/2" = 1'-0" FOR 22"X34" SHEET
SCALE: 3/4" = 1'-0" FOR 11"X17" SHEET
0 4" 8" 2'-0"

LICENSED ARCHITECT — VERONICA MARIE QUIN MARTIN — No. C 16981 — REN ____ — STATE OF CALIFORNIA

REGISTERED PROFESSIONAL ENGINEER — LINA M. GILMARTIN — No. C055585 — Exp. ____ — CIVIL — STATE OF CALIFORNIA

DSA/DPR MOU * 8.01 ACCESSIBILITY REVIEW	CALIFORNIA STATE FIRE MARSHALL-APPROVED
CERTIFICATION # _____	Approval of this plan does not authorize or approve any omission of deviation from applicable regulations. Final approval is subject to field inspection. One set of approved plans shall be available on the project site at all times.
REVIEWER: DATE:	Reviewed by Date

ACCESSIBILITY COMPLIANCE AND STATE FIRE MARSHALL APPROVAL ON FILE WITH THE DEPARTMENT OF PARKS AND RECREATION

CALIFORNIA STATE PARKS SINCE 1864

CENTRAL SERVICE CENTER
21 Lower Ragsdale Drive
Monterey, CA 93940

DESIGNED UMG
DRAWN GDR
CHECKED UMG

REVISIONS	DATE
	9-24-04

CONSULTANT:
WJE ENGINEERS ARCHITECTS MATERIAL SCIENTISTS
Wiss, Janney, Elstner Associates, Inc.
2200 Powell Street, Suite 825
Emeryville, CA 94608
510.428.2537 tel | 510.428.4826 fax

Santa Cruz District, 184 Old Adobe Road, Watsonville, CA 94076

Rancho San Andres Castro Adobe

Miscellaneous Details

Rehabilitation

DRAWING NO. 29488.020

SHEET NO. 4.10