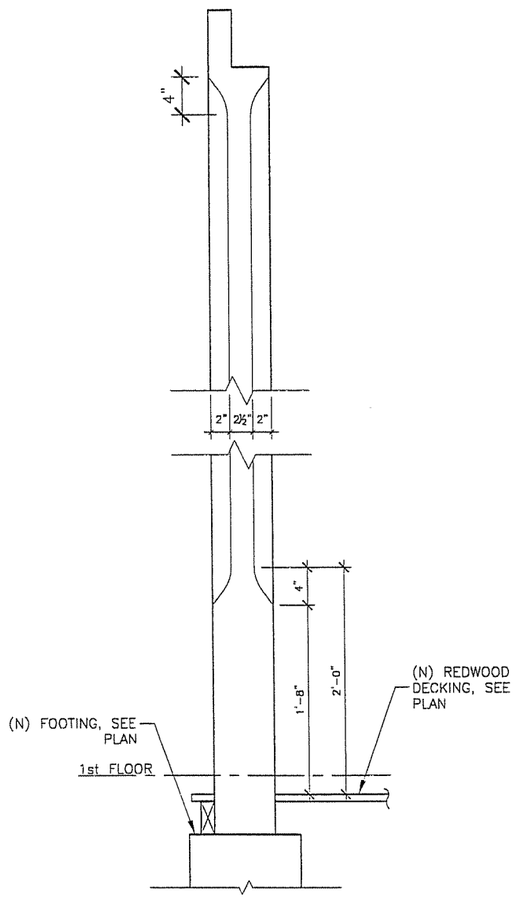

1 TYP WEST COL.- SOUTH ELEV.
SCALE: 1 1/2" = 1'-0" FOR 22"X34" SHEET
SCALE: 3/4" = 1'-0" FOR 11"X17" SHEET
0 4" 8" 2'-0"

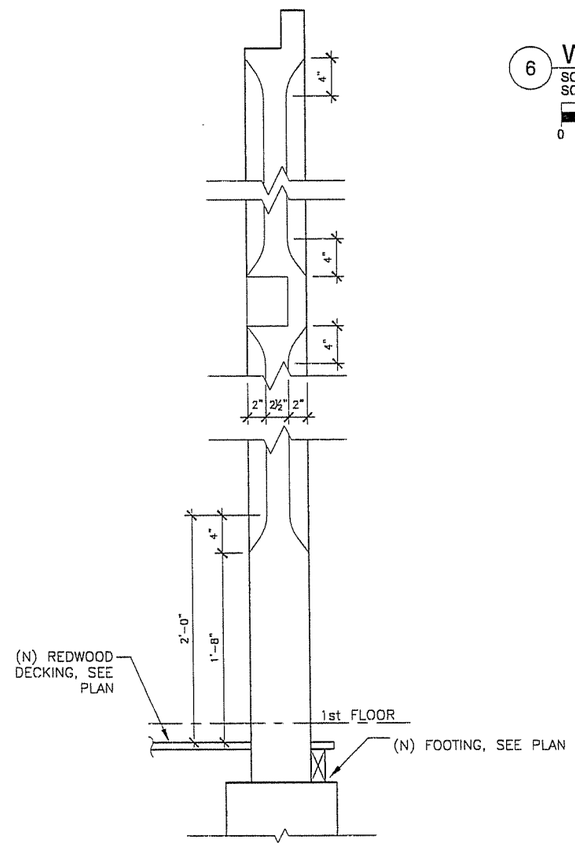

2 TYP EAST COL.- SOUTH ELEV.
SCALE: 1 1/2" = 1'-0" FOR 22"X34" SHEET
SCALE: 3/4" = 1'-0" FOR 11"X17" SHEET
0 4" 8" 2'-0"

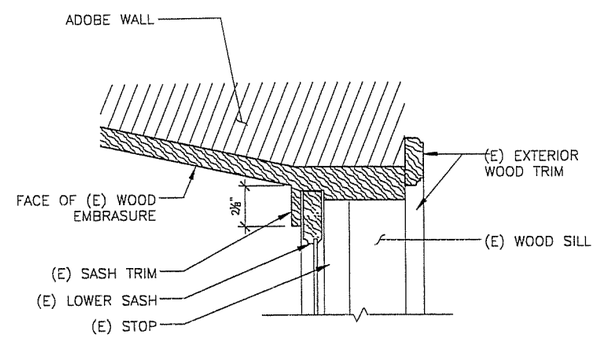

NOTE: HEAD SIMILAR

6 WINDOW 13 JAMB DETAIL
SCALE: 3" = 1'-0" FOR 22"X34" SHEET
SCALE: 1 1/2" = 1'-0" FOR 11"X17" SHEET
0 1" 2" 6"

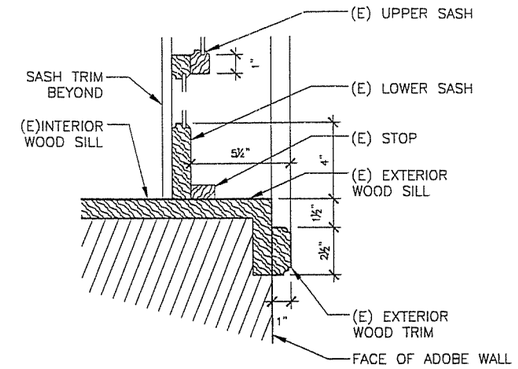

NOTE: VIF TRIM PROFILES & DIMENSIONS

5 SILL DETAIL
SCALE: 3" = 1'-0" FOR 22"X34" SHEET
SCALE: 1 1/2" = 1'-0" FOR 11"X17" SHEET
0 1" 2" 6"

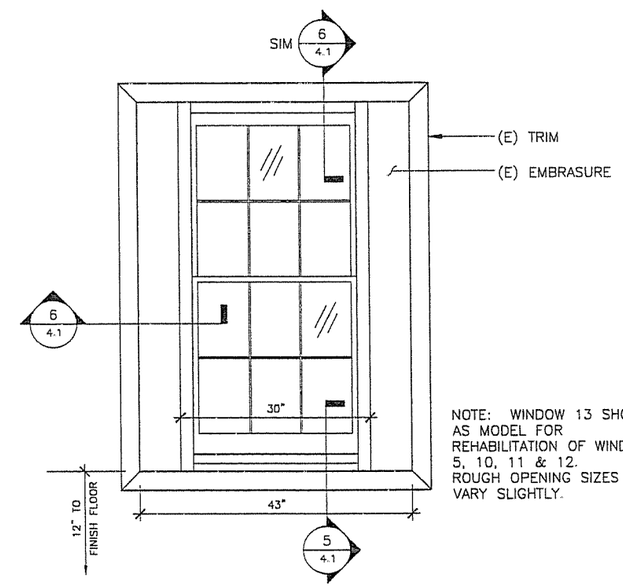

NOTE: WINDOW 13 SHOWN AS MODEL FOR REHABILITATION OF WINDOWS 5, 10, 11 & 12. ROUGH OPENING SIZES MAY VARY SLIGHTLY.

3 WINDOW 13 INTERIOR ELEV.
SCALE: 1" = 1'-0" FOR 22"X34" SHEET
SCALE: 1/2" = 1'-0" FOR 11"X17" SHEET
0 6" 1' 3'

LICENSED ARCHITECT VERONICA MARIE QUAM MARTIN No. C 16981 REN. ____ STATE OF CALIFORNIA

REGISTERED PROFESSIONAL ENGINEER UNA M. GILMARTIN No. C055585 Exp. ____ CIVIL STATE OF CALIFORNIA

DSA/DPR MOU * 8.01 ACCESSIBILITY REVIEW CERTIFICATION #	CALIFORNIA STATE FIRE MARSHALL-APPROVED Approval of this plan does not authorize or approve any omission of deviation from applicable regulations. Final approval is subject to field inspection. One set of approved plans shall be available on the project site at all times.
REVIEWER: DATE:	Reviewed by Date

ACCESSIBILITY COMPLIANCE AND STATE FIRE MARSHALL APPROVAL ON FILE WITH THE DEPARTMENT OF PARKS AND RECREATION

CALIFORNIA STATE PARKS SINCE 1864

CENTRAL SERVICE CENTER
21 Lower Ragsdale Drive
Monterey, CA 93940

DESIGNED UMG
DRAWN GDR
CHECKED UMG

REVISIONS

	DATE
	9-24-04

CONSULTANT:
WJE ENGINEERS ARCHITECTS MATERIAL SCIENTISTS

Santa Cruz District, 184 Old Adobe Road, Watsonville, CA 94076

Rancho San Andres Castro Adobe
TYP. WINDOW & TYP. COLUMN DETAILS
Rehabilitation

DRAWING NO. 29488.011

SHEET NO. 4.1

11 OF 20

DRAWING DATE: 09/24/04 PROJECT NAME: Rehabilitation PROJECT PHASE: 100% Construction Documents Plotted: Friday September 24, 2004 1:04pm by greide File Name: 4-1.dwg

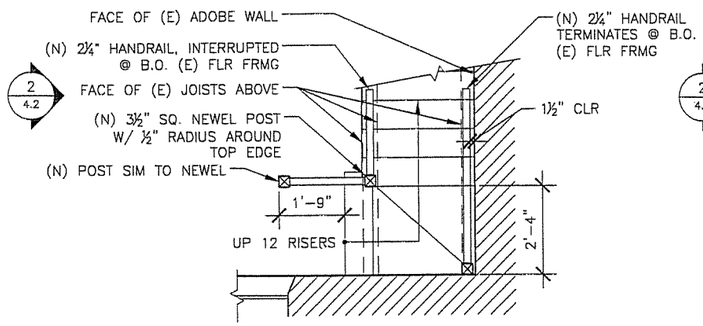

1a INT. STAIR PLAN - 1st FLR

SCALE: 1/2" = 1'-0" FOR 22"X34" SHEET
SCALE: 1/4" = 1'-0" FOR 11"X17" SHEET

0 1' 2' 6'

REF. NORTH TRUE NORTH

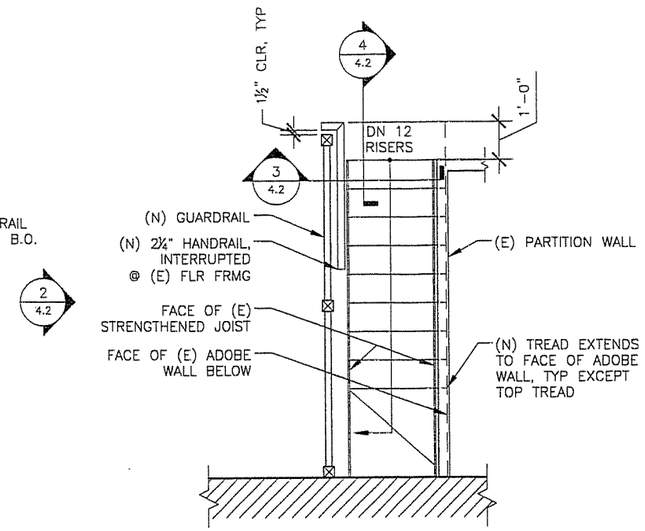

1b INT. STAIR PLAN - 2nd FLR

SCALE: 1/2" = 1'-0" FOR 22"X34" SHEET
SCALE: 1/4" = 1'-0" FOR 11"X17" SHEET

0 1' 2' 6'

REF. NORTH TRUE NORTH

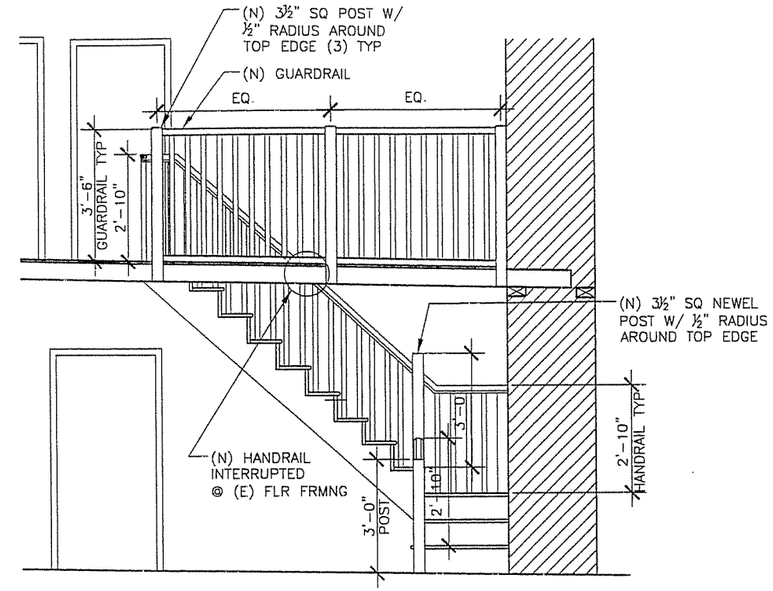

2 INT. STAIR ELEVATION

SCALE: 1/2" = 1'-0" FOR 22"X34" SHEET
SCALE: 1/4" = 1'-0" FOR 11"X17" SHEET

0 1' 2' 6'

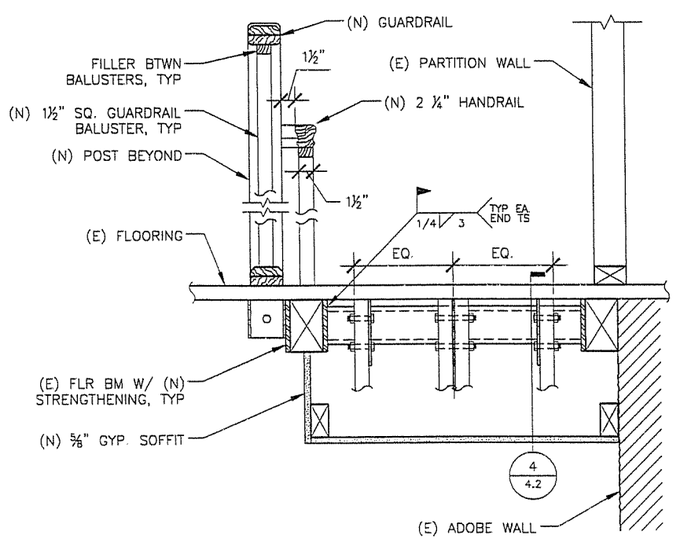

3 INTERIOR STAIR - STRINGER CONN. @ 2nd FLR

SCALE: 1 1/2" = 1'-0" FOR 22"X34" SHEET
SCALE: 3/4" = 1'-0" FOR 11"X17" SHEET

0 4" 8" 2'-0"

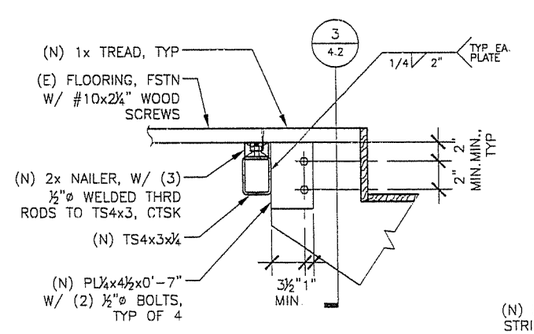

4 STRINGER CONNECTION @ INTERIOR STAIR - SECTION

SCALE: 1 1/2" = 1'-0" FOR 22"X34" SHEET
SCALE: 3/4" = 1'-0" FOR 11"X17" SHEET

0 4" 8" 2'-0"

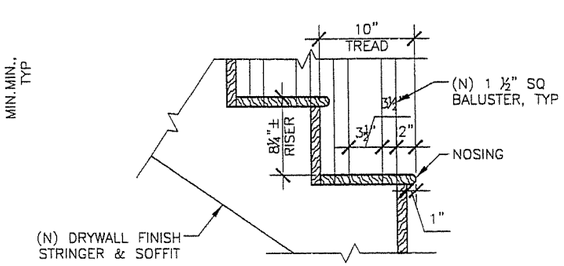

5 INTERIOR STAIR-TYP DIMS

SCALE: 1 1/2" = 1'-0" FOR 22"X34" SHEET
SCALE: 3/4" = 1'-0" FOR 11"X17" SHEET

0 4" 8" 2'-0"

LICENSED ARCHITECT — VERNON MARTIN GILLMARTIN — No. C 16981 — REN ____ — STATE OF CALIFORNIA

REGISTERED PROFESSIONAL ENGINEER — UNA M. GILLMARTIN — No. C055585 — Exp. ____ — CIVIL — STATE OF CALIFORNIA

DSA/DPR MOU * 8.01 ACCESSIBILITY REVIEW CERTIFICATION # _____	CALIFORNIA STATE FIRE MARSHALL-APPROVED Approval of this plan does not authorize or approve any omission of deviation from applicable regulations. Final approval is subject to field inspection. One set of approved plans shall be available on the project site at all times.
REVIEWER: DATE:	Reviewed by Date

ACCESSIBILITY COMPLIANCE AND STATE FIRE MARSHALL APPROVAL ON FILE WITH THE DEPARTMENT OF PARKS AND RECREATION

CALIFORNIA STATE PARKS SINCE 1864

CENTRAL SERVICE CENTER
21 Lower Ragsdale Drive
Monterey, CA 93940

DESIGNED UMG
DRAWN GDR
CHECKED UMG

REVISIONS	DATE
	9-24-04

CONSULTANT:

WJE ENGINEERS ARCHITECTS MATERIAL SCIENTISTS
Wiss, Janney, Elstner Associates, Inc.
2320 Powell Street, Suite 325
Emeryville, CA 94608
510-652-2937 tel | 510-652-0426 fax

Southeastern & Laboratories | Northeast, Ohio
Atlanta | Austin | Boston | Chicago | Cincinnati | Dallas-Fort Worth
Houston | Houston | Los Angeles | Memphis | Minneapolis-St. Paul
New York | Pittsburgh | San Francisco | Southwest Washington, D.C.

Santa Cruz District, 184 Old Adobe Road, Watsonville, CA 94076

Rancho San Andres Castro Adobe

Interior Stair

Rehabilitation

DRAWING NO. 29488.012

SHEET NO. 4.2

12 OF 20

DRAWING DATE: 09/24/04 PROJECT NAME: Rehabilitation PROJECT PHASE: 100% Construction Documents Plotted: Friday September 24, 2004 1:05pm by greide File Name: 4-2.dwg

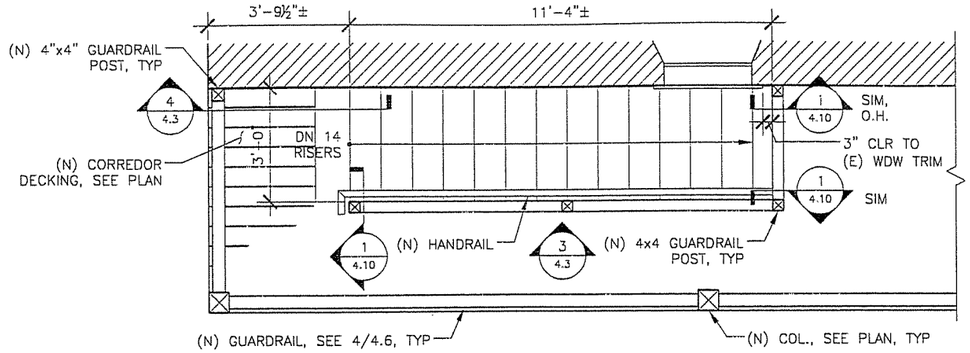

1 EXT. STAIR PLAN - 2nd FLR

SCALE: 1/2" = 1'-0" FOR 22"X34" SHEET
SCALE: 1/4" = 1'-0" FOR 11"X17" SHEET

REF. NORTH TRUE NORTH

0 1' 2' 6'

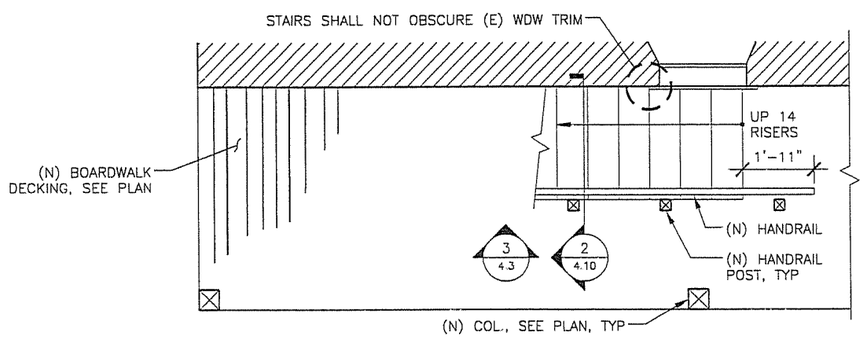

2 EXT. STAIR PLAN - 1st FLR

SCALE: 1/2" = 1'-0" FOR 22"X34" SHEET
SCALE: 1/4" = 1'-0" FOR 11"X17" SHEET

REF. NORTH TRUE NORTH

0 1' 2' 6'

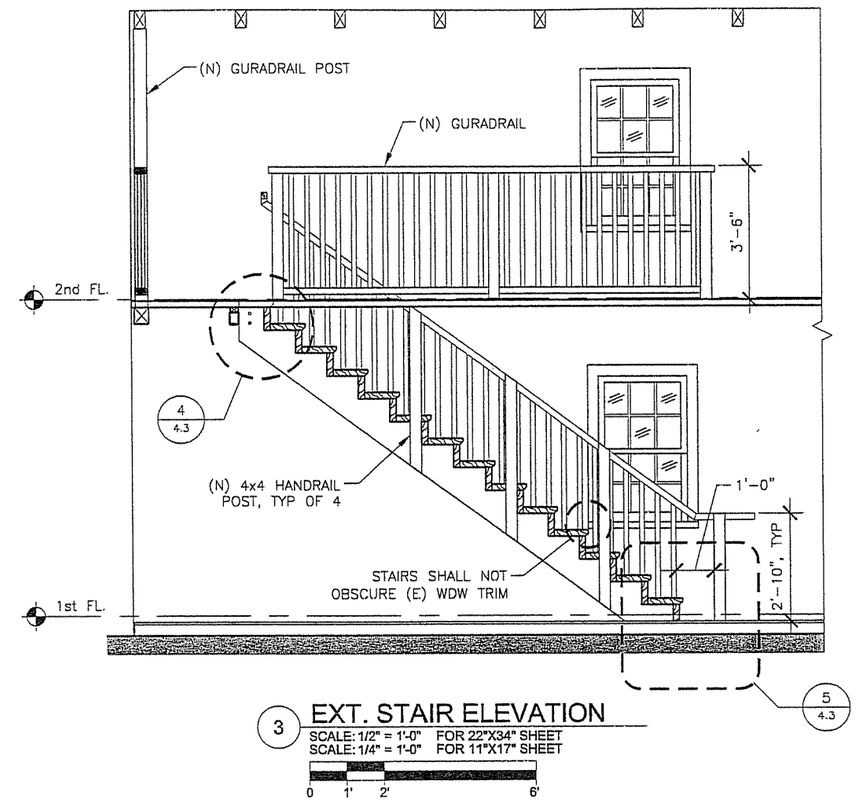

3 EXT. STAIR ELEVATION

SCALE: 1/2" = 1'-0" FOR 22"X34" SHEET
SCALE: 1/4" = 1'-0" FOR 11"X17" SHEET

0 1' 2' 6'

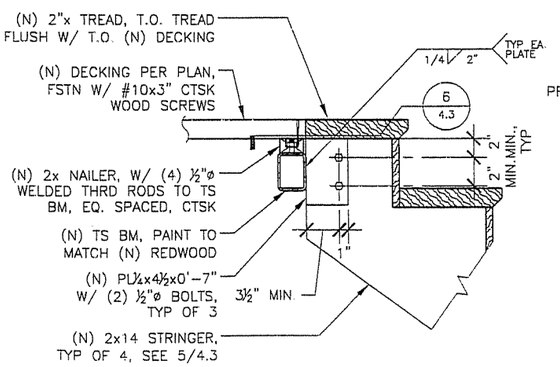

4 2nd FLR EXT. STRINGER CONN.

SCALE: 1 1/2" = 1'-0" FOR 22"X34" SHEET
SCALE: 3/4" = 1'-0" FOR 11"X17" SHEET

0 4" 8" 2'-0"

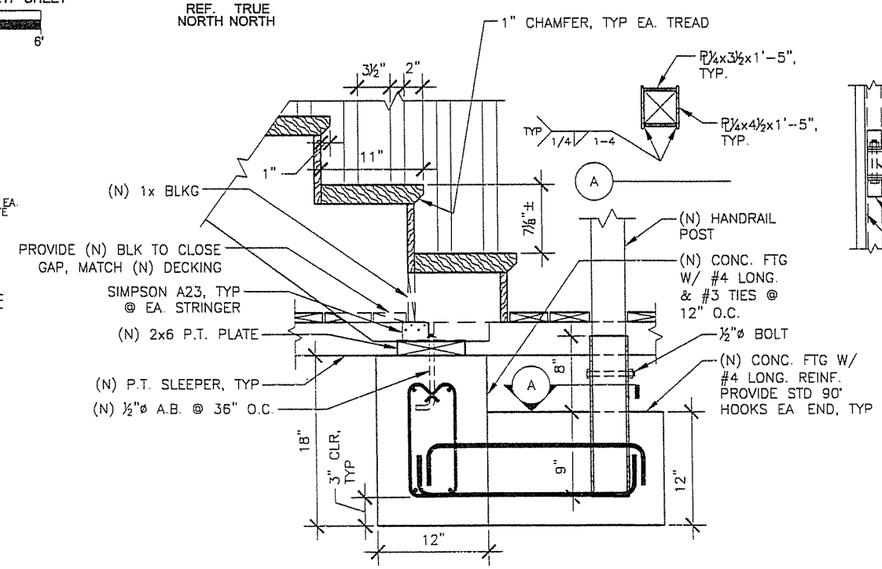

5 1st FLR EXT. STRINGER CONN.

SCALE: 1 1/2" = 1'-0" FOR 22"X34" SHEET
SCALE: 3/4" = 1'-0" FOR 11"X17" SHEET

0 4" 8" 2'-0"

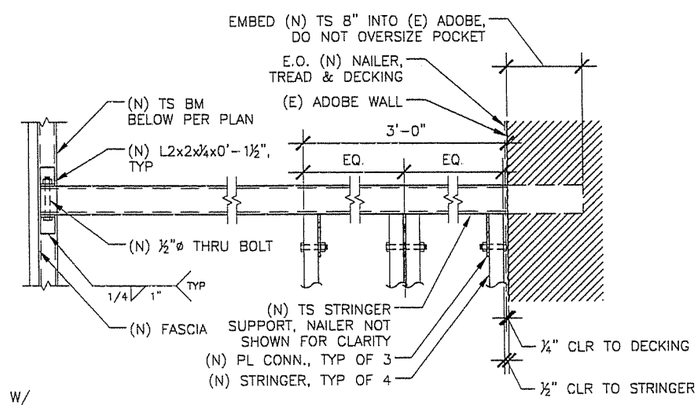

6 STRINGER CONNECTION @ 2nd FLR CORREDOR-PLAN

SCALE: 1 1/2" = 1'-0" FOR 22"X34" SHEET
SCALE: 3/4" = 1'-0" FOR 11"X17" SHEET

0 4" 8" 2'-0"

LICENSED ARCHITECT — VERONICA MARIE QUIN MARTIN — No. C 16981 — REN. ____ — STATE OF CALIFORNIA

REGISTERED PROFESSIONAL ENGINEER — LINA M. GILMARTIN — No. C055585 — Exp. ____ — CIVIL — STATE OF CALIFORNIA

DSA/DPR MOU * 8.01 ACCESSIBILITY REVIEW	CALIFORNIA STATE FIRE MARSHALL-APPROVED
CERTIFICATION # ____	Approval of this plan does not authorize or approve any omission of deviation from applicable regulations. Final approval is subject to field inspection. One set of approved plans shall be available on the project site at all times.
REVIEWER: DATE:	Reviewed by: Date

ACCESSIBILITY COMPLIANCE AND STATE FIRE MARSHALL APPROVAL ON FILE WITH THE DEPARTMENT OF PARKS AND RECREATION

CALIFORNIA STATE PARKS SINCE 1864

CENTRAL SERVICE CENTER
21 Lower Ragsdale Drive
Monterey, CA 93940

DESIGNED	UMG
DRAWN	GDR
CHECKED	UMG

REVISIONS	DATE
	9-24-04

CONSULTANT:

WJE ENGINEERS ARCHITECTS MATERIAL SCIENTISTS
Wiss, Janney, Elstner Associates, Inc.
2300 Powell Street, Suite 820
Emeryville, CA 94608
510.428.2627 tel | 510.428.2628 fax
Departments & Laboratories: Northbrook, Illinois
Atlanta | Austin | Boston | Chicago | Cincinnati | Cleveland | Columbus | Dallas | Houston | Los Angeles | Minneapolis | Minneapolis-St. Paul | New York | Princeton | San Francisco | Washington, D.C.

Santa Cruz District, 184 Old Adobe Road, Watsonville, CA 94076

Rancho San Andres Castro Adobe

Exterior Stair

Rehabilitation

DRAWING NO. 29488.013

SHEET NO. 4.3

13 OF 20

DRAWING DATE: 09/24/04 PROJECT NAME: Rehabilitation PROJECT PHASE: 100% Construction Documents Plotted: Friday September 24, 2004 1:05pm by greide File Name: 4-3.dwg

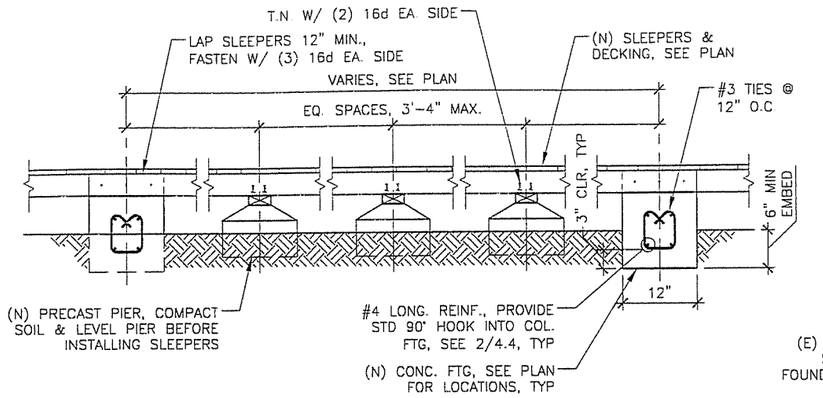

1 BOARDWALK

SCALE: 1" = 1'-0" FOR 22"X34" SHEET
SCALE: 1/2" = 1'-0" FOR 11"X17" SHEET

0 6" 1' 3'

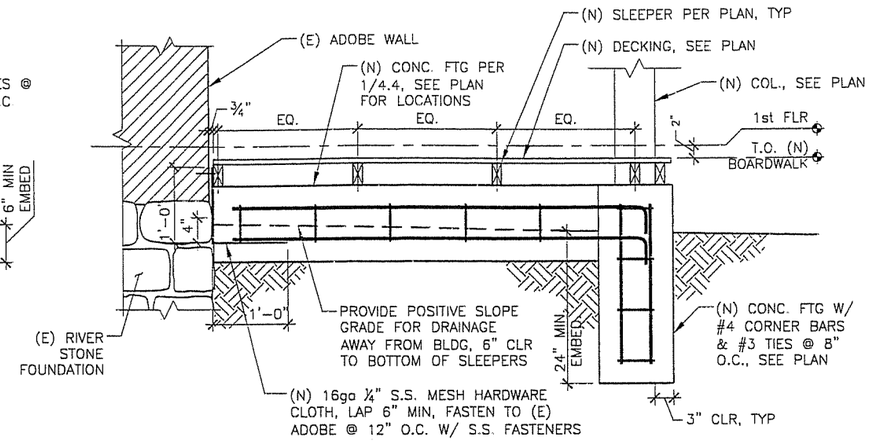

2 BOARDWALK

SCALE: 1" = 1'-0" FOR 22"X34" SHEET
SCALE: 1/2" = 1'-0" FOR 11"X17" SHEET

0 6" 1' 3'

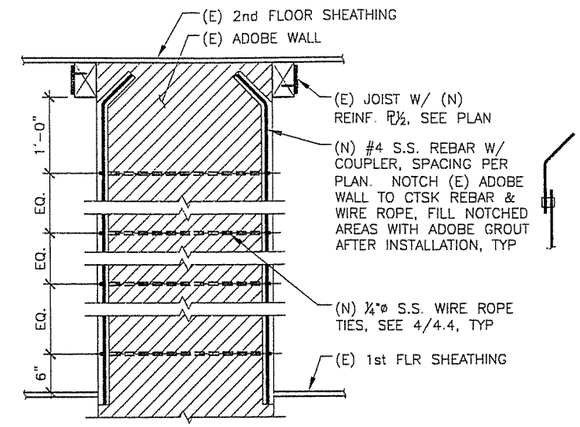

3 INT. WALL REINF. - SECTION

SCALE: 1" = 1'-0" FOR 22"X34" SHEET
SCALE: 1/2" = 1'-0" FOR 11"X17" SHEET

0 6" 1' 3'

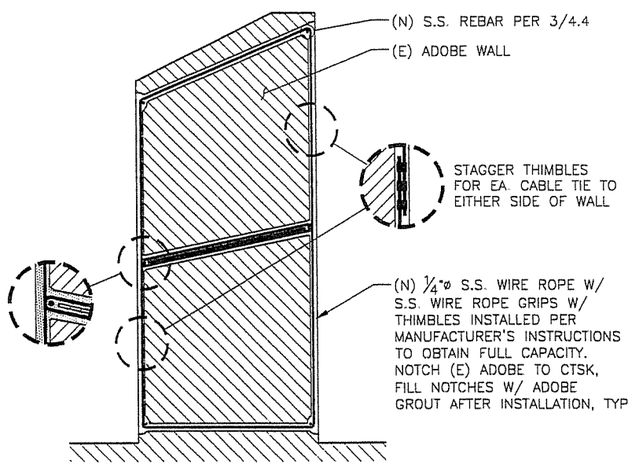

4 INT. WALL REINF. - PLAN

SCALE: 1" = 1'-0" FOR 22"X34" SHEET
SCALE: 1/2" = 1'-0" FOR 11"X17" SHEET

0 6" 1' 3'

REF. NORTH TRUE NORTH

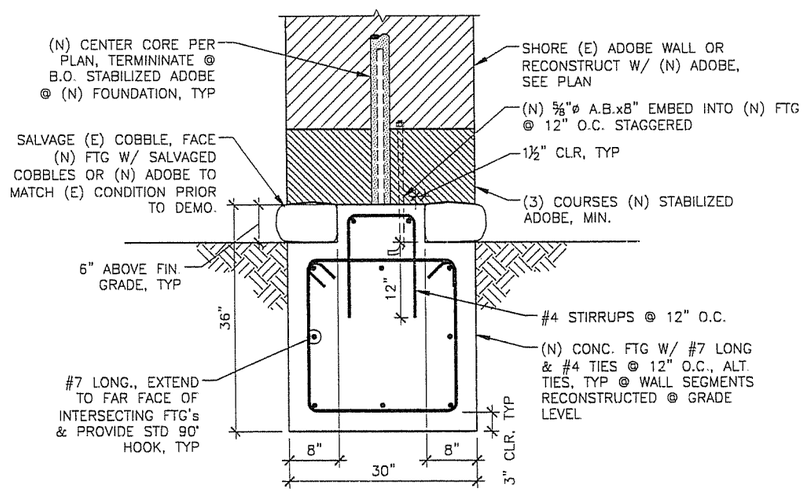

5 WALL RECONSTRUCTION @ COCINA

SCALE: 1" = 1'-0" FOR 22"X34" SHEET
SCALE: 1/2" = 1'-0" FOR 11"X17" SHEET

0 6" 1' 3'

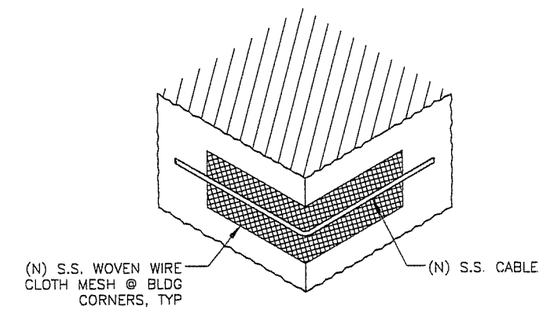

6 (N) CORNER REINFORCING FOR CONT. CABLE AT 2ND FLOOR LEVEL

SCALE: 1 1/2" = 1'-0" FOR 22"X34" SHEET
SCALE: 3/4" = 1'-0" FOR 11"X17" SHEET

0 2" 4" 12"

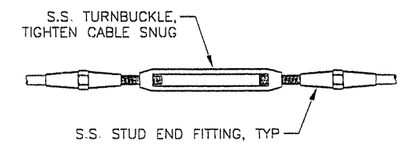

NOTE: PLACE SPLICE 10'-0" MIN. FROM BUILDING CORNERS, TIGHTEN CABLE SNUG

7 S.S. CABLE SPLICE

SCALE: 3" = 1'-0" FOR 22"X34" SHEET
SCALE: 1 1/2" = 1'-0" FOR 11"X17" SHEET

0 1" 2" 6"

LICENSED ARCHITECT — VERONICA MARIE GUMA MARTIN — No. C 16981 — REN. ____ — STATE OF CALIFORNIA

REGISTERED PROFESSIONAL ENGINEER — LINA M. GILMARTIN — No. C055585 — Exp. ____ — CIVIL — STATE OF CALIFORNIA

DSA/DPR MOU * 8.01 ACCESSIBILITY REVIEW CERTIFICATION #	CALIFORNIA STATE FIRE MARSHALL-APPROVED Approval of this plan does not authorize or approve any omission of deviation from applicable regulations. Final approval is subject to field inspection. One set of approved plans shall be available on the project site at all times.
REVIEWER: DATE:	Reviewed by Date

ACCESSIBILITY COMPLIANCE AND STATE FIRE MARSHALL APPROVAL ON FILE WITH THE DEPARTMENT OF PARKS AND RECREATION

CALIFORNIA STATE PARKS SINCE 1864

CENTRAL SERVICE CENTER
21 Lower Ragsdale Drive
Monterey, CA 93940

DESIGNED	UMG
DRAWN	GDR
CHECKED	UMG

REVISIONS	DATE
	9-24-04

CONSULTANT:

WJE ENGINEERS ARCHITECTS MATERIAL SCIENTISTS
Wiss, Janney, Elstner Associates, Inc.
2200 Powell Street, Suite 825
Emeryville, CA 94608
510.652.2027 tel | 510.652.0415 fax

Santa Cruz District, 184 Old Adobe Road, Watsonville, CA 94076

Rancho San Andres Castro Adobe

Boardwalk & Adobe Reinf. Details

Rehabilitation

DRAWING NO. 29488.014

SHEET NO. 4.4

14 OF 20

DRAWING DATE: 09/24/04 PROJECT NAME: Rehabilitation PROJECT PHASE: 100% Construction Documents

Plotted: Friday September 24, 2004 1:05pm by greide File Name: 4-4.dwg

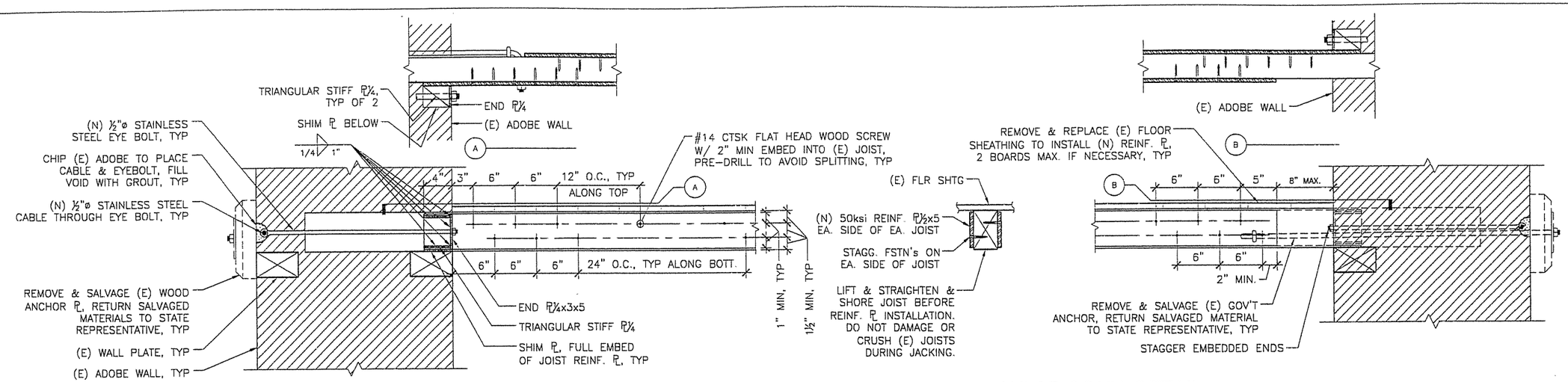

1 TYPICAL DOUBLE-SIDED JOIST STRENGTHENING & PERPENDICULAR CONN. DETAIL

SCALE: 1 1/2" = 1'-0" FOR 22"X34" SHEET
SCALE: 3/4" = 1'-0" FOR 11"X17" SHEET

0 2" 4" 12"

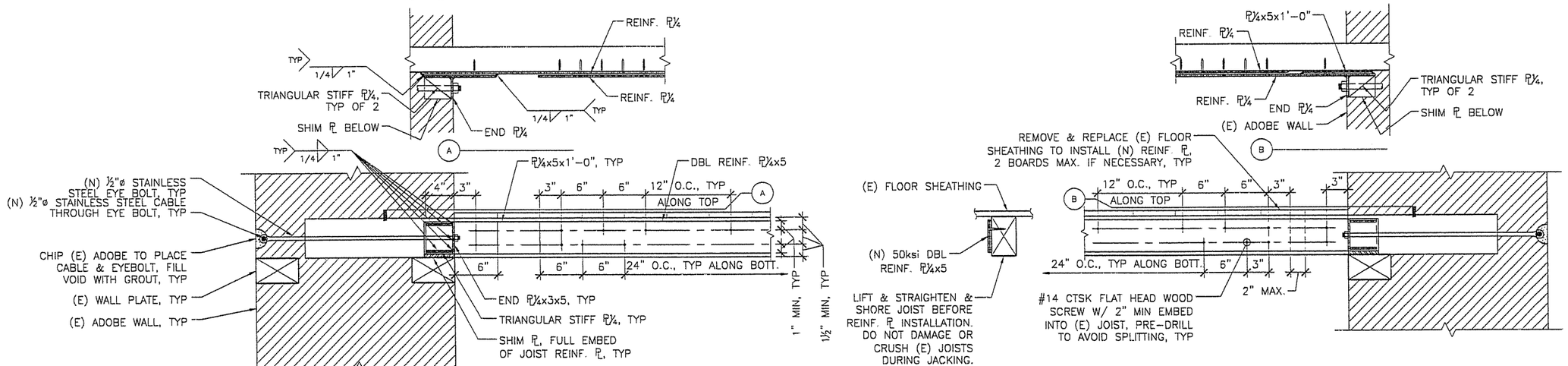

2 TYPICAL SINGLE-SIDED JOIST STRENGTHENING & PERPENDICULAR CONN. DETAIL

SCALE: 1 1/2" = 1'-0" FOR 22"X34" SHEET
SCALE: 3/4" = 1'-0" FOR 11"X17" SHEET

0 2" 4" 12"

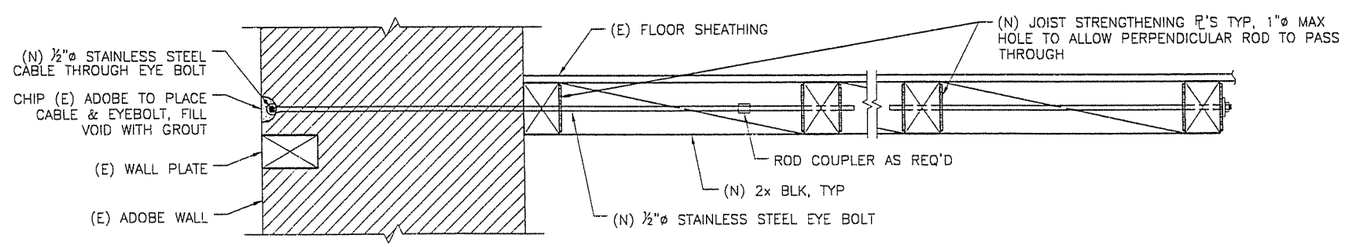

3 TYPICAL PARALLEL JOIST CONN. DETAIL

SCALE: 1 1/2" = 1'-0" FOR 22"X34" SHEET
SCALE: 3/4" = 1'-0" FOR 11"X17" SHEET

0 2" 4" 12"

LICENSED ARCHITECT — VERONICA MARIE DIAZ MARTIN — No. C 16981 — REN ____ — STATE OF CALIFORNIA

REGISTERED PROFESSIONAL ENGINEER — DINA M. GILMARTIN — No. C055585 — Exp ____ — CIVIL — STATE OF CALIFORNIA

DSA/DPR MOU * 8.01 ACCESSIBILITY REVIEW	CALIFORNIA STATE FIRE MARSHALL-APPROVED
CERTIFICATION # _____	Approval of this plan does not authorize or approve any omission of deviation from applicable regulations. Final approval is subject to field inspection. One set of approved plans shall be available on the project site at all times.
REVIEWER: DATE:	Reviewed by Date

ACCESSIBILITY COMPLIANCE AND STATE FIRE MARSHALL APPROVAL ON FILE WITH THE DEPARTMENT OF PARKS AND RECREATION

CALIFORNIA STATE PARKS SINCE 1864

CENTRAL SERVICE CENTER
21 Lower Ragsdale Drive
Monterey, CA 93940

DESIGNED UMG
DRAWN GDR
CHECKED UMG

REVISIONS	DATE
	9-24-04

CONSULTANT:

WJE ENGINEERS ARCHITECTS MATERIAL SCIENTISTS
Wiss, Janney, Elstner Associates, Inc.
2200 Powell Street, Suite 825
Emeryville, CA 94608
510.652.2637 tel | 510.652.0426 fax

Santa Cruz District, 184 Old Adobe Road, Watsonville, CA 94076

Rancho San Andres Castro Adobe

2nd Floor Framing Details

Rehabilitation

DRAWING NO. 29488.015

SHEET NO. 4.5

15 OF 20

DRAWING DATE: 09/24/04 PROJECT NAME: Rehabilitation PROJECT PHASE: 100% Construction Documents Plotted: Friday September 24, 2004 1:05pm by greide File Name: 4-5.dwg