Appendices

Tips and Techniques Table

This table includes most of the tips and techniques put forward in the Interpretive Programs and Interpretive Facilities sections of this publication. Rather than grouping these items by disability category, as those sections are structured, this table puts forward the tips and techniques in terms of program preparation and presentation. Although this table indicates which disability categories are served by the various techniques included herein, readers should note how many of these items are useful for serving all of our visitors, not just those with disabilities, which is why the last column in this table was included.

General Etiquette	Hearing Impairments	Learning Disabilities	Mental Retardation	Mobility Impairments	Visual Impairments	Ltd English Proficiency	Older Adults	All Visitors
Speak clearly and in a normal tone of voice. Try to project your voice from your diaphragm. Speak louder only if it is requested, and then try not to shout.								✓
If you have difficulty understanding a visitor who has a speech impairment, do not be afraid to ask them to repeat themselves. If you still do not understand, repeat the information you did understand, and ask them to repeat again.	✓	✓	✓			✓		
Address and treat adults with disabilities as adults.	✓	✓	✓	✓	✓	✓	✓	
When giving directions or instructions, speak slowly and clearly and keep your sentences short.								✓
Offer assistance if it appears to be needed. If your offer is declined, do not insist. If your offer is accepted, ask how you can best help.								✓
Do not worry about using words like “hear” or “listen,” "run" or "walk," and "look" or "see" around people with hearing, vision or mobility impairments. These words are part of everyone's vocabulary.	✓			✓	✓			
If you know some sign language, use it--your attempts will generally be appreciated. However, in situations when an interpreter has been requested in advance, a certified professional should be hired.	✓							

General Etiquette	Hearing Impairments	Learning Disabilities	Mental Retardation	Mobility Impairments	Visual Impairments	Ltd English Proficiency	Older Adults	All Visitors
Be aware that some visitors with disabilities may have service dogs accompanying them. Service dogs are allowed in park areas and facilities. Service dog users generally prefer that their dogs not be petted, led, or spoken to.	✓	✓	✓	✓				
With all visitors, there is a wide variation of abilities and limitations. Find out how you can best assist each individual.								✓
Be aware that an individual with a learning disability may stare at you or stand close to you when you speak. This individual may be displaying over-attentiveness, or may be trying to block out competing noises.		✓						
If inappropriate behavior is displayed, the problem should not be ignored but instead discussed calmly. Accusations may only cause stress and make the situation worse.								✓
Never pick up or carry a person with a mobility impairment unless they have requested it and you have had specific training on how to do so, except in cases of emergency. Make sure all other options have been exhausted.				✓				
Do not lean or hang on a visitor's wheelchair or other mobility aid. These are considered part of their body space.				✓				
When speaking for more than a few minutes with individuals using wheelchairs, consider kneeling or sitting down so they do not have to look up at you.				✓				
Never take mobility aids away from visitors unless they request it. Having their mobility aids nearby makes individuals feel more independent and secure. This includes people using crutches.				✓				

General Etiquette	Hearing Impairments	Learning Disabilities	Mental Retardation	Mobility Impairments	Visual Impairments	Ltd English Proficiency	Older Adults	All Visitors
Slippery or uneven surfaces may pose problems for visitors, especially those walking with assistive devices. If a wheelchair is available, offer it to them. If not, offer assistance, or show them an alternate route.								✓
Do not make general assumptions about the abilities or limitations of an individual with a disability. Let the individual decide what he or she can and cannot do.								✓
Look directly at visitors when speaking to them; do not talk through an intermediary. Try not to turn away while you are talking to them.								✓
When offering assistance to a visitor with a vision impairment, you may want to lightly touch the individual on the shoulder as you begin speaking, so he or she is aware that you are talking to them.					✓			
Be aware of cultural differences. Gestures or body movements do not universally communicate the same meaning or may be considered disrespectful.								✓
Make an effort to correctly pronounce visitors' names.								✓
Be patient with visitors. Do not interrupt them or finish their sentences.								✓
Avoid using the word "elderly" because it implies frailty and helplessness, which most older adults are not.							✓	

Advance Information/Preparations	Hearing Impairments	Learning Disabilities	Mental Retardation	Mobility Impairments	Visual Impairments	Ltd English Proficiency	Older Adults	All Visitors
If you are notified beforehand that one or more persons with a learning disability will be on your tour, try to find out what kinds of characteristics are represented, if any, and how you can best assist them.								✓
If visitation warrants it, arrange to have a language translator or bilingual interpreter present during your program or available at the park site. (Keep in mind that you may need to shorten your presentation to allow time for the translator.)						✓		
On short notice, ask a bilingual family member or friend of the visitor to translate for you. Or, if you think that will be too disruptive, arrange for a private tour.						✓		
Try to speak with visitors beforehand to determine how to meet their needs at your program.								✓
Choose programs appropriate for your audience's age. Program content does not need to be at a lower comprehension level, just communicated in a variety of ways.								✓
If the entire audience consists of visitors with learning disabilities or mental retardation, you should consider limiting the program to no longer than 30 minutes, with only one or two primary ideas.		✓	✓					
When publicizing the program, indicate the level of accessibility of the program, as well as of the facility where it will be presented.								✓
If requested in advance by a visitor with a hearing impairment, arrange for an oral or sign language interpreter.	✓							

Setting Considerations	Hearing Impairments	Learning Disabilities	Mental Retardation	Mobility Impairments	Visual Impairments	Ltd English Proficiency	Older Adults	All Visitors
Provide adequate lighting for reading, drawing, or craft activities.								✓
Allow visitors with hearing impairments to sit up front so they can hear better, watch the oral or sign language interpreter, or facilitate speech-reading.	✓							
Choose an area with minimal background noise and distractions for your program.								✓
Beforehand, evaluate the facility or area where the program will be presented. It needs to be accessible to wheelchairs, and wheelchair seating requirements should be met.					✓			
Be aware of the line-of-sight of individuals in wheelchairs or seated in chairs. The video screen should be placed at a height that does not require the audience to tilt their heads backward to see, as some visitors may have limited muscle movement in their necks and shoulders.				✓			✓	
Beforehand, evaluate the location where the program is to be presented. Plan a route to the room or area that is accessible for the entire audience. Remove any obstacles or protruding objects that may be encountered. Make sure wheelchair seating requirements are met.								✓
A spotlight on you and/or a sign language interpreter may be needed in a dark room or at nighttime.								✓
Position yourself so you are facing a light source. This allows visitors to see your face and will help facilitate speech-reading.								✓
If possible, provide an amplification system to improve communication between you and your visitors.								✓

Setting Considerations	Hearing Impairments	Learning Disabilities	Mental Retardation	Mobility Impairments	Visual Impairments	Ltd English Proficiency	Older Adults	All Visitors
Make sure emergency evacuation routes are accessible to all visitors.								✓
Provide seating with backs and armrests. Remember, not all visitors are able to stand for an extended period of time or sit on the floor, or able to get up and down from that position easily. For outside programs, seating in the shade is preferred. Some visitors with mobility impairments cannot regulate their body temperature and may be susceptible to heat-related ailments.								✓
Be aware of lighting conditions and, where possible, minimize glares on glass.								✓

Presentation Techniques	Hearing Impairments	Learning Disabilities	Mental Retardation	Mobility Impairments	Visual Impairments	Ltd English Proficiency	Older Adults	All Visitors
Read aloud exhibit or trail signage.		✓	✓		✓	✓		
Demonstrate an activity or task before asking program participants to perform it.								✓
Make sure you have the visitors' attention before beginning to speak. You may need to lightly tap individuals with visual impairmens on the shoulder or wave to get their attention. Be sure your audience understands what was just said before continuing.								✓
When giving directions, make sure you give them from the visitors' point of view. For example, do not say, "The restroom is to my right." Instead say, "The restroom is to your left." It may also be helpful to point in the direction to which you are referring, or draw out a map.								✓

Presentation Techniques	Hearing Impairments	Learning Disabilities	Mental Retardation	Mobility Impairments	Visual Impairments	Ltd English Proficiency	Older Adults	All Visitors
Directions or information should be provided step-by-step. Be sure the information is fully understood. If necessary, repeat information using different words, or a draw a map or diagram.								✓
Provide visitors with a general orientation to the area by describing its prominent features.					✓			
Tell visitors with visual impairments if you are leaving briefly; they may not be aware that you have walked away. Conversely, note when you have returned, and with whom.					✓			
Before you begin walking with a visitor with visual impairments, say where you are going. For example, "We are going into the library, and there are five steps leading to the door." Be prepared to move more slowly through an area than you might ordinarily.					✓			
Be very specific when giving directions or describing an area. Be sure to discuss any obstacles that may be encountered.					✓			
When speaking for translation or for a sign language interpreter, use simple sentences, pause for the interpreter after each thought, and avoid the use of colloquialisms, idioms, and slang, as they are not easily translated.	✓					✓		
If necessary, pantomime your message. This may be the only way to communicate with some visitors who have limited English proficiency. Use facial expressions and hand and body movements. Draw pictures, if needed, to communicate your message.	✓					✓		
Be sure to allow extra time between slides for visitors to see the images you have explained. Some visitors may be watching you and speech-reading, or they may be watching the sign language or oral interpreter.	✓							

Presentation Techniques	Hearing Impairments	Learning Disabilities	Mental Retardation	Mobility Impairments	Visual Impairments	Ltd English Proficiency	Older Adults	All Visitors
When working with a sign language interpreter, try to use short sentences. A subject-verb-object sentence structure is best, because it is the same syntax of American Sign Language. For example, say, "The snake ate the mouse," not, "The mouse was eaten by the snake."	✓							
Always face the audience while speaking.								✓
Avoid sweeping arm movements or moving around while speaking, as this may distract some visitors.								✓
Inform the audience of the length of the program and the location of the exits, and permit them to leave early. If possible, make prior arrangements to have a staff member escort them back to the starting point, or to their campsite for an evening program. For longer presentations, you may want to schedule a break. Notify the audience before the presentation begins that an intermission can be expected.								✓
Avoid "over-stimulating" visitors with learning disabilities. An overload of visual, auditory, or tactile stimulation can easily confuse some individuals.		✓						
Information should be grouped together in an organized fashion, given step-by-step, and reinforced through repetition.								✓
Discuss ideas in basic terms. and avoid abstractions.		✓						
Make smooth transitions in presentations. Jumping from one subject to another may cause confusion.								✓
Encourage audience participation whenever possible. This will reinforce information and increase interest in your program.								✓

Presentation Techniques	Hearing Impairments	Learning Disabilities	Mental Retardation	Mobility Impairments	Visual Impairments	Ltd English Proficiency	Older Adults	All Visitors
Look for visitors to indicate they wish to answer a question before calling on them.								✓
Some individuals with learning disabilities have difficulty understanding the concept of historical and calendar time. If this information is included in your program, use different ways of explaining or demonstrating it.		✓						
Explain new or difficult words and concepts.								✓
In a program that involves discussion, repeat questions from the audience. Some visitors may not have heard the question being asked, may have forgotten the question, or may not have been paying attention. Once lost from the conversation, their interest in the presentation may be lost.								✓
Do not immediately dismiss a question as being irrelevant. Sometimes, poor language skills confuse what the individual may be trying to say. Try your best to relate the question or answer to the subject.								✓
In areas where programs are to be presented without seating, suggest to visitors using wheelchairs that they sit in front of the audience, so they can see and hear better.				✓				
Suggest to visitors with visual impairments that they sit up close to the front of the audience.					✓			
Wait for the group to settle before you begin the program.								✓
While presenting a program, use very descriptive words, and include as much detail as you can. Emphasize textures and colors of objects or the topography of areas; otherwise, they could be overlooked.								✓
Read aloud any written information displayed in the program.		✓			✓	✓		

Presentation Techniques	Hearing Impairments	Learning Disabilities	Mental Retardation	Mobility Impairments	Visual Impairments	Ltd English Proficiency	Older Adults	All Visitors
During a slide presentation, point to objects as you refer to them, so visitors can more easily follow along.								✓
Repeat information in different ways. Use different words, gestures, and objects to convey interpretive information.								✓
Offer to meet with visitors after the program to answer any questions, or to repeat information.								✓
After a program in darkened conditions, some visitors may need extra time to allow their eyesight to adjust to the changes in light. Before leaving, take a few minutes to review the presentation they just saw, or use this time for questions and answers. This will give them the additional time they may need.								✓
Pose questions to the entire audience to encourage involvement.								✓
Skits and songs with hand and body motions are great ways to involve the audience. Do not assume visitors with disabilities or limited English proficiency cannot or do not want to participate--let them make the decision.	✓	✓	✓	✓	✓	✓	✓	
Relate new information to something familiar to your audience.								✓
It is important that you demonstrate any activity or concept before asking the audience to participate. Make sure everyone understands the movements before beginning.								✓
Choose program activities that involve partners and that do not single out individuals. Some individuals may not want to become involved due to fear of embarrassment. Positive reinforcement may encourage future involvement.								✓

Presentation Techniques	Hearing Impairments	Learning Disabilities	Mental Retardation	Mobility Impairments	Visual Impairments	Ltd English Proficiency	Older Adults	All Visitors
Do not exclude people using communication boards or books from discussions. Be sure to give them the extra time they may need.				✓				
If you have a visitor who is using an electric wheelchair, wait until the noise of the wheelchair has stopped before you begin speaking.				✓				
Look for visitors to indicate they wish to answer a question before calling on them. Asking them to respond before they are ready may cause unnecessary embarrassment.								✓
When distributing written materials, explain and/or read them for those who may not be able to read them.		✓			✓	✓		
If you are pushing a visitor using a wheelchair, do not deliver program information while walking. This individual may not hear you. It may be necessary to seek assistance from another staff member to push the wheelchair, while you present your program.				✓				
Give clear, verbal direction to the group when moving from one area to another. Once at your destination, provide a general orientation to the whole area, including atmosphere and visual details.					✓			
Before beginning the walk or tour, describe the route that will be taken, and give a brief overview of the resources that will be interpreted along the way.								✓
Too much information may cause confusion and could result in disinterest in the tour or talk. Keep the program focused around your theme.								✓
Try to keep the size of the tour group small.		✓	✓					
It may be necessary to remind the tour group of the park's rules.								✓

Presentation Techniques	Hearing Impairments	Learning Disabilities	Mental Retardation	Mobility Impairments	Visual Impairments	Ltd English Proficiency	Older Adults	All Visitors
Prearranged rest breaks should be announced at the beginning of the tour, and additional breaks should be accommodated, if requested. Also, inform the group of the location or absence of restrooms and drinking fountains along the tour.								✓
Offer an optional “leisure tour,” a separate tour available to anyone who wants to proceed at a slower pace.				✓	✓		✓	
During walks or tours, allow extra time between points of interest or exhibits. People with assistive mobility devices may need additional time to move about.				✓			✓	
Avoid long or fast-paced walks.		✓	✓	✓			✓	
Do not talk as you demonstrate an activity or task. The audience may be concentrating on your movements or the object, and not on your words. Give information before or after the demonstration.	✓	✓	✓			✓		
If possible, when demonstrating a skill, allow a visitor with a visual impairment to hold your hands as you work, while at the same time explaining in detail what you are doing.					✓			

Program Tools	Hearing Impairments	Learning Disabilities	Mental Retardation	Mobility Impairments	Visual Impairments	Ltd English Proficiency	Older Adults	All Visitors
Have pencils and paper handy to communicate with visitors who are hearing impaired, to draw maps, and to use symbols to communicate with visitors with limited English proficiency.								✓

Program Tools	Hearing Impairments	Learning Disabilities	Mental Retardation	Mobility Impairments	Visual Impairments	Ltd English Proficiency	Older Adults	All Visitors
Involve all the senses in your program. Incorporate interpretive materials pertaining to the theme of your program that may be smelled, heard, touched, and tasted. Information provided in this way reinforces learning and increases interest in your program.								✓
Inform visitors of any assistive listening systems or devices available at the facility.								✓
Present films that are captioned, or provide a transcript for those films that are not captioned.	✓							
Incorporate items that may be touched and that pertain to the theme of the program. Models, plant and animal specimens, and dioramas add another dimension to verbal explanation.								✓
Include new or difficult words and concepts and their definitions in a handout, along with suggestions for additional reading. Individuals may want to learn more about the subjects presented.								✓
Handouts supplied to the audience should be in large, dark print (a 12 point, sans serif font) and on a light matte background. Be prepared to explain the contents of handouts for those who are unable to read them. Written materials that are distributed regularly to visitors should also be available in an alternate format, such as printed in an 18 point sans serif font and/or in Braille.		✓	✓		✓	✓		
Provide the narrative of your program in an audiodescription format.					✓			
Offer films, videos, or slides narrated in different languages.						✓		
If visitation warrants it, provide programs in different languages or provide transcripts of the programs in different languages.						✓		

Program Tools	Hearing Impairments	Learning Disabilities	Mental Retardation	Mobility Impairments	Visual Impairments	Ltd English Proficiency	Older Adults	All Visitors
Have an outline of your program available, so visitors can more easily follow along.								✓
Project title slides or song slides on an A/V screen during your program. This will help visitors in following along in the program.								✓
When incorporating items that may be touched into your campfire program, be aware of the audience's capabilities and limitations. You or another staff member may need to hold the object for the visitors, while they look at it.				✓				
If all attempts to make an area of the park site accessible are unsuccessful, provide a film, slide show, or photographs of those public areas not accessible by wheelchair.				✓				
Magnifiers should be available to use on photographs, signs, or exhibits, or to take on outdoor walks. The whole group can benefit and enjoy hand lenses by taking a closer look at the detail of historic and natural objects.								✓
Use enlarged photographs to allow visitors to see more detail.								✓
Use life-size or scale models of objects that may not be touched.								✓
Provide a tactile relief map of the area. This involves the senses of touch and sight, while allowing visitors to see where they are going on their tour or walk.								✓
Provide visitors with a simple map of the area or floor plan(s) of the building, indicating where you will go and what you will see while on tour. This will stimulate curiosity and interest in your program.								✓
Offer self-guided printed or audio tours for those who wish to proceed at their own pace.								✓

Publications Guidelines

The following recommendations will make your publications more readable and understandable to all visitors, including those with disabilities. These are general recommendations and should be used in conjunction with the specific information provided in *Access to Parks Guidelines*, Chapter 30, and Departmental Notice No. 2000-07.

The Accessibility Section must have an opportunity for review and comment on publications that will have an on-going life. This includes park brochures, entrance station handouts, interpretive guides, posters, etc. Optional review of one-time use materials is available and encouraged. Please submit items for review at least two weeks in advance of your desired return deadline.

When writing:

- Keep sentences short.
- Use a subject-verb-object sentence structure. For example, say, "Jack London wrote *The Sea Wolf*," instead of, "*The Sea Wolf* was written by Jack London."
- Avoid complex sentences.
- Avoid using slang or jargon.
- Use words like "barrier free" or "accessible." Do not use words like "special" or "facilities for the handicapped."

When designing:

- Never print with anything less than a **12 point font**. Written materials should also be available on request in large print with dark ink on a light matte background. An 18 point font is recommended, however, a smaller font may be necessary for long publications.
- Type styles with serifs (ornamental attachments or extenders on letters) are difficult to read and should be avoided. Italicization, which tends toward making readability difficult, should be kept to a minimum. For a person with low vision, these features cause the letters to more easily run together, the result is blurring. Often, when an alternate format version of a publication is requested (and announcement of such availability should be printed in the item to be published), this may easily be accomplished by copying the standard use publication to a satisfactory enlargement. Therefore, typeface in block style, is a good choice. Examples include Arial, Helvetica, Tahoma, Verdana, and Novarese. Increasing boldness or narrowing can diminish the readability of even these acceptable styles.
- Margins between columns of text should be at least 7/8". With a smaller margin, the columns may appear to run together, causing visitors to read straight across. Outside margins should be at least 1/2" wide.

- Include in all publications any available TDD or TTY relay number as well as the statement, “Prior to arrival, visitors with disabilities who need assistance should contact” and then list a contact name and phone number.
- Use the International Symbol of Accessibility, the International Symbol of Access for Hearing Loss, and/or TTY, (all are shown below) where applicable.

Written materials for interpretive programs should include:

- An outline of the tour or talk.
- A map of the area.
- Definitions of new or unusual words.
- A brief history of the topics, including names or places.
- Suggestions for books or other resource materials relating to the theme.
- Pictures or graphics pertaining to the subject.
- The level of difficulty, distance, and time required for the walk or tour. It is highly recommended that program publicity contain a description of exactly what will be required on the part of participants. For example, “This interpretive walk will cover a 1.5 mile distance. While no stair climbing is necessary, there is a short, although significant, enroute grade of approximately 9%. The trail is subject to nearly continual sunlight, however, a shaded bench is available mid-way. Restrooms are available only at the trail departure point.”

State of California - The Resources Agency CALIFORNIA STATE PARKS **DEPARTMENTAL NOTICE** **No. 2000-07**		MANUAL Operations
SUBJECT ACCESSIBILITY AND PUBLICATIONS POLICY		CHAPTER DOM 1800 (new)
ISSUED October 19, 2000	EXPIRES When Incorporated	REFERENCE

DPR 375 (Rev. 11/97)(Word, 12/3/97)

WHEN APPLICABLE, ENTER THE NUMBER AND DATE OF THIS DEPARTMENTAL NOTICE IN THE MARGIN OF THE MANUAL PAGE, ADJACENT TO THE SECTION(S) AFFECTED BY IT.

This Departmental Notice has been re-created for transmittal in electronic format. The original notice was signed by Mark Schrader, Chief, Park Design and Construction Division; and Dick Troy, Deputy Director, Park Operations.

INTRODUCTION

Communicating park information to the public is essential to the mission of the California Department of Parks and Recreation. This communication often takes the form of publications. The Americans with Disabilities Act of 1990 (ADA) requires that public entities' publications are accessible to people with disabilities; therefore, the Department must ensure that its communications with individuals with disabilities are as effective as its communications with others. Regulatory references: 28 CFR 35.160-35; Title II TAM 11-7.000.

This Departmental Notice establishes a policy to ensure that the Department's publications comply with the law and also establishes clear standards to follow in producing accessible publications throughout the Department. In addition to being accessible, publications must provide accurate information about accessible facilities and programs.

ACCESSIBILITY AND PUBLICATIONS

All new or reprinted Department publications shall be prepared using the following parameters based on the Americans with Disabilities Act of 1990 (ADA). This policy applies to publications developed at the Headquarters, District or Unit level, including items produced by cooperating associations and concessionaires, and park program materials. Publications include brochures, booklets, books, announcements, advertisements, park maps, campground maps, plans, technical reports and newsletters.

1. Public Information

   A. Publications shall integrate information about accessible features with general descriptive information regarding park sites and facilities. A standard symbol of accessibility shall be used to locate accessible features on maps and to identify the location of accessibility information within the publication text.

B. Publications shall state the availability of a teletypewriter (TTY), if available. If a TTY is not available, the publications shall include the following statement: "To use the California Relay Service with TTY, call (888) 877-5378 or without TTY, call (888) 877-5379."

C. Publications shall incorporate the following standardized accessibility statement: "California State Parks does not discriminate against individuals with disabilities. Prior to arrival, visitors with disabilities who need assistance should contact — (contact and phone number)."

This statement encourages visitors to request assistance, such as American Sign Language (ASL) interpretation for the deaf. There are other languages that are used, including Signed Exact English (SEE), Manual Coded English (MCE), or Pidgin Signed English (PSE). A visitor may prefer Real Time Captioning.

D. When applicable, publications shall state: "This publication is available in alternate formats by contacting — (contact and phone number)."

Alternate formats include audio tape recordings, large print, Braille, electronic file, and the Internet.

2. Standard Type Font Size

A. Standard type font size for brochure text is 12 point. Fonts should be easy to read and may be either serif or sans serif.

This is an example of 12-point type font (Arial).

3. Large Print

A. Printed park visitor information shall be available upon request in large print format.

B. Large print materials shall be at least 18-point size in sans serif type font. "Sans serif" means without any short lines stemming from and at an angle to the upper and lower ends of the strokes of a letter. See examples below:

This is 18-point size.

This is Arial – an acceptable sans serif font.

This is Times New Roman – an unacceptable font for Large Print formats.

4. Contrast

   A. To enhance readability, dark print or graphics should be used on a light background. Reversed light print with a dark background may also be acceptable, if there is high contrast.

5. Symbols

   A. International recreation symbols should be used on park maps, whenever possible, to identify areas, facilities, or points of interest.

6. Readability

   A. Publications shall be easy to read. Concise sentences without slang or academic jargon should be used whenever possible.

7. Compliance Review

   A. All new or redesigned publications of park visitor information, such as the California State Parks Official Map, the Reservations Brochure and individual park brochures, shall be reviewed by the Accessibility Section before printing. This review shall be scheduled to coincide with the appropriate stage of review during design of each publication. The Accessibility Section will review for content on accessible features, type and other items mentioned in this notice.

If you have questions regarding this notice, please contact Linda McDonald, at (9l6) 654-2442 or CALNET 454-2442.

Signed by	Signed by
Mark Schrader Chief, Park Design and Construction Division	Dick Troy Deputy Director, Park Operations

Resource Directory

The organizations and companies listed below are included for informational purposes only. California State Parks does not endorse the products of any of these companies. This listing is intended to be used in conjunction with the companies and organizations included in the State Price Schedule, for which information is included following this section.

Government Agencies

California State Independent Living Council
1600 K St, Ste 100
Sacramento CA 95814
(916) 445-0142 (voice)
(916) 445-5627 (TTY)
(916) 445-5973 (fax)
www.calsilc.org

Equal Employment Opportunity Commission
1801 L St NW
Washington DC 20507
(800) 669-4000 (voice)
(800) 669-6820 (TTY)
www.eeoc.gov

U.S. Department of Justice
950 Pennsylvania Ave NW
Civil Rights Division
Disability Rights Section - NYAV
Washington DC 20530
(800) 514-0301 (voice)
(800) 514 0380 (TTY)
(202) 307-1198 (fax)
www.ada.gov

Advocacy and Assistance Organizations

General

International Center for Disability Information
Barron Drive, PO Box 1004
Institute WV 25112-1004
(304) 766-2680 (voice)
(304) 766-2680 (TTY)
Director@icdi.wvu.edu
www.icdi.wvu.edu/others.htm

Mainstream, Inc.
PO Box 47054
Topeka KS 66647
(800) 582-1428 or (785) 266-6422 (voice)
(785) 266-2113 (fax)
www.mainstreaminc.net
mainstrm@inlandnet.net

National Center on Accessibility
2805 E 10th St, Ste 190
Bloomington IN 47408-2698
(812) 856-4422 (voice)
(812) 856-4421 (TTY)
(812) 856-4480 (FAX)
www.indiana.edu/~nca
nca@indiana.edu

Hearing Impairments

Center on Deafness-Inland Empire
7344 Magnolia Ave, Ste 140
Riverside CA 92504
(909) 359-5200 (voice and TTY)
(909) 359-5112 (fax)
Lifesigns: (909) 359-5297 (voice or TTY)
www.codie.org

Deaf Community Services of San Diego, Inc.
3930 4th Ave, Ste 300
San Diego CA 92103
(619) 398-2441 (voice)
(619) 398-2440 (TTY)
(619) 398-2444 (fax)
www.cdsofsd.org
info@cdsofsd.org

Deaf Counseling, Advocacy and Referral Agency (DCARA)
14895 E 14th St, Ste 200
San Leandro CA 94578
(877) 322-7288 (voice)
(877) 322-7299 (TTY)
(510) 483-1790 (fax)
www.dcara.org

Helen Keller National Center for Deaf-Blind Youths and Adults
111 Middle Neck Rd
Sands Point, NY 11050
(516) 944-8900 (voice)
(516) 944-8637 (TTY)
(516) 944-7302 (fax)
www.helenkeller.org/national

Laurent Clerc National Deaf Education Center
Gallaudet University
800 Florida Ave NE
Washington DC 20002
(202) 651-5031 (voice/TTY)
(202) 651-5051 (fax)
clerccenter.gallaudet.edu

National Association for the Deaf (NAD)
814 Thayer Ave
Silver Spring MD 20910
(301) 587-1788 (voice)
(301) 587-1789 (TTY)
(301) 587-1791 (fax)
www.nad.org
NADinfo@nad.org

Self-Help for Hard of Hearing People (SHHH)
7910 Woodmont Ave, Ste 1200
Bethesda MD 20814
(301) 657-2248 (voice)
(301) 657-2249 (TTY)
(301) 913-9413 (fax)
www.shhh.org
national@shhh.org

Learning Disabilities

Learning Disabilities Association of America
4156 Library Rd
Pittsburgh PA 15234-1349
(412) 341-1515 (voice)
(412) 344-0224 (fax)
www.ldanatl.org
info@ldaamerica.org

Learning Disabilities Association of California
PO Box 601067
Sacramento CA 95860
(866) 532-6322 or (916) 725-7881 (voice)
(916) 725-8786 (fax)
www.ldaca.org

National Center for Learning Disabilities
381 Park Ave S, Ste 1401
New York NY 10016
(888) 575-7373 or (212) 545-7510 (voice)
(212) 545-9665 (fax)
www.ncld.org

Mental Retardation

The Arc (Association for Retarded Citizens)
Governmental Affairs Office
1010 Wayne Ave, Ste 650
Silver Spring MD 20910
(310) 565-3842 (voice)
(310) 565-3843 (fax)
www.thearc.org

California Association for the Retarded
2000 O St, Ste 250
Sacramento CA 95818
(916) 498-1635 (voice)
(916) 498-1385 (fax)
www.carforchoice.org

Mobility Impairments

Arthritis Foundation
PO Box 7669
Atlanta GA 30357-0669
(800) 283-7800 (voice)
www.arthritis.org

Epilepsy Foundation of America
4351 Garden City Dr
Landover MD 20785
(800) 332-1000 (voice only)
www.epilepsyfoundation.org

Muscular Dystrophy Association, Inc.
3300 E Sunrise Dr
Tucson AZ 85718
(800) 572-1717
www.mdausa.org

National Association of the Physically Handicapped
1375 Dewitt Dr
Akron OH 44313
(800) 743-5008 (voice)
www.naph.net

National Easter Seals Society
230 W Monroe St, Ste 1800
Chicago IL 60606
(312) 726-6200 or (800) 221-6827 (voice)
(312) 726-4258 (TTY)
(312) 726-1494 (fax)
www.easter-seals.org

National Multiple Sclerosis Society
733 3rd Ave
New York NY 10017
(800) 344-4867
www.nationalmssociety.org

United Cerebral Palsy
1660 L St, Ste 700
Washington DC 20036
(202) 776-0406 (voice)
(800) 872-5827 (voice)
(202) 973-7197 (TTY)
(202) 776-0414 (fax)
www.ucp.org

Vision Impairments

American Council of the Blind, Inc.
1155 15th St NW, Ste 1004
Washington DC 20005
(800) 424-8666 (voice)
(202) 467-5085 (fax)
www.acb.org
info@acb.org

Associated Services for the Blind
919 Walnut St
Philadelphia PA 19107
(215) 627-0600 (voice)
(215) 922-0692 (fax)
www.asb.org
asbinfo@asb.org
(also has a Braille press)

Helen Keller National Center for Deaf-Blind Youths and Adults
111 Middle Neck Rd
Sands Point NY 11050
(516) 944-8900 (voice)
(516) 944-8637 (TTY)
(516) 944-7302 (fax)
www.helenkeller.org/national

Lighthouse International
111 E 59th St
New York NY 10022-1202
(800) 829-0500 or (212) 821-9200 (voice)
(212) 821-9713 (TTY)
www.lighthouse.org
info@lighthouse.org

The Metropolitan Washington Ear, Inc.
Audio Description, Inc.
35 University Blvd E
Silver Spring MD 20901
(301) 681-6636 (voice)
(301) 681-5227 (fax)
www.washear.org
information@washear.org

National Federation of the Blind
1800 Johnson St
Baltimore MD 21230
(410) 659-9314 (voice)
(410) 685-5653 (fax)
www.nfb.org
nfb@nfb.org

Older Adults

National Council on the Aging, Inc.
300 D St SW, Ste 801
Washington DC 20024
(202) 479-1200 (voice)
(202) 479-6674 (TTY)
(202) 479-0735 (fax)
www.ncoa.org
info@ncoa.org

Product and Service Suppliers

Assistive Listening Systems

Associated Sound
1417 Del Paso Blvd
Sacramento CA 95815
(916) 649-8040 (voice)
(916) 649-0243 (fax)
www.associatedsound.com

Auditory Instruments, Inc.
17740 Samson Ln
Huntington Beach CA 92647
(714) 847-8445

Centrum Sound
572 LaConner Dr
Sunnyvale CA 94087
(408) 736-6500 (voice)
(408) 736-6552
www.centrumsound.com
centrumweb@aol.com

Nady Systems
6701 Shellmound St
Emeryville CA 94608
(510) 652-2411 (voice)
(510) 652-5075 (fax)
www.nadywireless.com
ussales@nady.com

Phonic Ear, Inc.
3880 Cypress Drive
Petaluma CA 94954
(800) 227-0735 (voice)
www.phonicear.com
customerservice@phonicear.com
(Company can refer you to a retailer in your area.)

TELEX Communications, Inc.
1200 Portland Ave S
Burnsville MN 55337
(952) 884-4051 (voice)
(952) 884-0043 (fax)
www.telex.com
info@telex.com
(Company can refer you to a retailer in your area.)

Captioning

National Captioning Institute (NCI)
1900 Gallows Rd, Ste 3000
Vienna VA 22182
(703) 917-7600 (voice and TTY)
(703) 917-9853 (fax)
www.ncicap.org
or
303 N Glenoaks Blvd, Ste 200
Burbank CA 91502
(818) 238-0068 (voice and TTY)
(818) 238-4266 (fax)

Sign Language or Oral Interpreters

Registry of Interpreters for the Deaf, Inc.
333 Commerce St
Alexandria VA 22314
(703) 838-0030 (voice)
(703) 838-0459 (TTY)
(703) 838-0454 (fax)
www.rid.org
info@rid.org

TTYs

Telecommunications for the Deaf, Inc.
8630 Fenton St, Ste 604
Silver Spring MD 20910-3803
(301) 589-3786 (voice)
(301) 589-3006 (TTY)
(301) 589-3797 (fax)
www.tdi-online-org
info@tdi-online.org

Barrier-Free Walkways

Superdeck
7753 Beech St NE
Minneapolis MN 55432
(800) 355-4093
www.superdecksystems.com
info@superdecksystems.com

Audio Tours

Antenna Audio, Inc.
P.O. Box 176
Sausalito CA 94966
(415) 332-4862 (voice)
(415) 332-4870 (fax)
www.antennaaudio.com
inquiry@antennaaudio.com

Vista Group International
17 Washington St, Ste 300
Norwalk CT 06854
(203) 852-5557 (voice)
(203) 852-5559 (fax)
www.vistagroupinternational.com
info@vistagroupinternational.com
(Soundstik® systems, audio subtitles, multi-language audio tours)

Department of General Services
Procurement Division
707 3rd Street, 2nd Floor
P. O. Box 989054
West Sacramento, CA 95798-9054

STATE OF CALIFORNIA

STATE PRICE SCHEDULE

STATE PRICE SCHEDULES ARE GUARANTEED PRICE LISTS BY SUPPLIERS. AN AGENCY IS NOT REQUIRED TO PURCHASE FROM A STATE PRICE SCHEDULE IF LIKE ITEMS AND BRANDS ARE AVAILABLE ELSEWHERE AT A LOWER PRICE. SHOULD YOU REQUIRE A LARGE QUANTITY OF AN ITEM LISTED ON AN SPS, IT MAY BE TO YOUR ADVANTAGE TO SUBMIT AN ESTIMATE FOR PURCHASE ON A COMPETITIVE BASIS.

THIS PRICE SCHEDULE SHALL NOT BE CONSTRUED AS A COMMITMENT TO PURCHASE ANY OR ALL OF OUR REQUIREMENTS FROM THE FIRM LISTED ON THE PRICE SCHEDULE. IT MERELY INDICATES THAT THE SUPPLIER WILL ACCEPT ANY ORDERS STATE AGENCIES MAY PLACE WITH THE FIRM IN ACCORDANCE WITH THE TERMS OF THIS STATE PRICE SCHEDULE.

PRODUCT	**Adaptive Equipment and Services for Persons with Disabilities**
SPS NO.	**2-02-99-01**

EFFECTIVE: 01-01-2002 until terminated

VENDOR: Various

SMC CLASS: None

DISTRIBUTION CODE: Q-1 and Statewide Departmental List

SUPERSEDES SPS: 2-00-99-01

To obtain assistance or report non-compliance by Supplier, call or write: Department of General Services, Procurement Division, 707 3rd Street, 2nd Floor, P. O. Box 989054, West Sacramento, California 95798-9054, or call Sharon DuBose, (916) 375-4463, CALNET 480-4463, Fax (916) 375-4522, E-mail: sharon.dubose@dgs.ca.gov.

This State Price Schedule is available on the DGS Procurement Division Internet web page:

http://www.pd.dgs.ca.gov/pricesched/adaptive

TAX: Sales & Use: Plus

MAXIMUM ORDER: $ 25,000 excluding applicable taxes.

ORDERING PROCEDURE: An order for Adaptive products may be placed with any of the suppliers listed in the attachments. Orders may not exceed $25,000. Orders should be submitted on a Contract/Delegation Purchase Order (Form Std. 65). Show this State Price Schedule (SPS) number on each order.

NOTE: A copy of each Std. Form 65 must be submitted to the Department of General Services, Procurement Division, Data Entry Unit, 707 3rd Street, 2nd Floor, P. O. Box 989054, West Sacramento, CA 95798-9054.

SCOPE: The goal of this SPS is to promote the timely delivery of adaptive equipment and services so that state employees with disabilities or clients of the California Department of Rehabilitation can gain the benefits of reasonable accommodations in a prompt manner. This SPS is also designed to make use of qualified vendors who provide the very specialized products and services designed for persons with disabilities.

This SPS does not require the use of formal written bids. An order can be placed directly with any vendor on the list which is included with this SPS. It is not necessary to obtain more than one price quote, and telephone bids, with standard documentation, are acceptable. However, state purchases should be done with adequate knowledge of the fairness of the price. Therefore, those making purchases under this SPS are strongly encouraged to research available resources, such as those contained in the vendor list, in order to obtain quality products and services at a fair price.

Purchases of “turnkey” systems can be made under this SPS if desired, so that evaluation, hardware, software, installation, and training can be included in a single order. It is specifically recognized that purchase of a computer on which adaptive equipment and/or software will be installed can be purchased as part of the package from a single vendor. However, purchases of turnkey systems is not required if making purchases of individual components from separate vendors can be done without adversely affecting the timeliness and quality of the final outcome.

<u>Individual products or services may also be purchased such as evaluation/consultation on what adaptive equipment/services may be appropriate. Training on the use of adaptive equipment may also be purchased separately. Service or repair of adaptive equipment, including a turnkey system, may be purchased under this SPS. Interpretive services for people who are deaf or hard of hearing may be purchased under this SPS.</u>

AGENCY REPORTING REQUIREMENTS: Effective January 1, 2001, ordering agencies must report specific information on independent sole proprietor contractors to the Employment Development Department (EDD) as required by Senate Bill 542. The law requires state agencies to report on contractors who receive compensation for services performed, or who enter into a contract for services for which compensation to be paid, in the aggregate, will total $600 or more. It requires all payments for services in the amount of $600 or more to sole proprietors to be reported to EDD within 20 days of payment. If a series of transactions less than $600 each, to the same contractor, total $600 or more in a given year, it must also be reported.

This reporting requirement applies to those purchase orders placed against this State Price Schedule which have a service component included.

For more information regarding this requirement, please visit the EDD web site at **www.edd.ca.gov**. For assistance in reporting to EDD, please call 916/657-0529, the EDD Tax Branch, Accounts Services Group.

CONTACT PERSON: Inquiries regarding this SPS or requests for additions or changes to attached listings should be directed to Timothy Ford at (voice) 916-654-0263, (fax) 916-657-3017.

IMPORTANT NOTICE TO STATE AGENCIES REGARDING DRUG-FREE WORKPLACE CERTIFICATION:

The Drug-Free Certification was not obtained from the vendors and therefore each agency placing orders against this State Price Schedule will be required to have vendors submit a Drug-Free Workplace Certification to them.

FOR 810 REPORTING PURPOSES, VENDOR IS IDENTIFIED AS: Large Business

JANICE KING, MANAGER
ACQUISITIONS BRANCH

References

American Association of Museums. *The Accessible Museum: Model Programs of Accessibility for Disabled and Older People*. Washington, DC: American Association of Museums, 1992.

American Association of Museums. *Everyone's Welcome: The Americans with Disabilities Act and Museums*. Washington, DC: American Association of Museums, 1998.

American Foundation for the Blind. *A Picture is Worth a Thousand Words For Blind and Visually Impaired Persons Too! An Introduction to Audiodescription*. New York: American Foundation for the Blind, 1991.

American Foundation for the Blind. *Recreation Programming for Visually Impaired Children and Youth*. New York: American Foundation for the Blind, 1981.

Baroff, George. *Developmental Disabilities - Psychological Aspects*. Austin: Pro-Ed, 1990.

Beechel, Jacque. *Interpretation for Handicapped Persons: A Handbook for Outdoor Recreation Personnel*. Seattle: National Park
Service, Pacific Northwest Region, 1975.

Bos, Candace S. and Sharon Vaughn. *Strategies for Teaching Students with Learning and Behavior Problems*. Des Moines: Allyn and Bacon, Inc., 1988.

Brown, Mary Lou. *Adaptations of Interpretive Trails for Mobility Impaired Persons.* California State University, Sacramento, Master's Degree Thesis. Sacramento: 1978.

California Department of Parks and Recreation. *Access to Parks Guidelines*. Sacramento: California Department of Parks and Recreation, 2001.

Dattilo, John, PhD. *Inclusive Leisure Services: Responding to the Rights of People with Disabilities*. State College, PA: Venture Publishing, 1994.

Falkner, M.A., Wilber H. and Mary Falkner. *Techniques with Tangibles: A Manual for Teaching the Blind*. Springfield: Charles C. Thomas Publishing, 1982.

Fradd, Sally H. and Jeanne M. Weismantle. *Meeting the Needs of Culturally and Linguistically Different Students*. Austin: College Hill Press, 1989.

Gardner, James F. and Michael S. Chapman. *Developing Staff Competencies for Supporting People with Developmental Disabilities: An Orientation Handbook*. Paul H. Brookes Publishing, 1993.

Gibbens, Michael. *Americans with Disabilities Act Compliance Handbook*. Fairfax: CEEM Information Services, 1993.

Grinder, Allison L. and E. Sue McCoy. *The Good Guide: A Sourcebook for Interpreters, Docents, and Tour Guides*. Scottsdale: Ironwood Press, 1985.

Groff, Gerda with Laura Gardner. *What Museum Guides Need to Know: Access for Blind and Visually Impaired Visitors*. New York: American Foundation for the Blind, 1989.

Hardy, James. *Cerebral Palsy*. Englewood Cliffs: The Center for Applied Research in Education, 1983.

Harwell, Joan M. *Complete Learning Disabilities Handbook*. Englewood Cliffs: The Center for Applied Research in Education, 1989.

Herson, Michael and Phillip S. Strain. *Handbook of Developmental and Physical Disabilities*. Tarrytown: Pergamon Press, 1988.

Hunter, Carol. *Everyone's Nature: Designing Interpretation to Include All*. Helena, MT: Falcon Press, 1994.

Joffee, Elga. *A Practical Guide to the ADA and Visual Impairment*. New York: AFB Press, 1999.

Kenny, Alice P. *Access to the Past: Museum Programs for Handicapped Visitors*. Nashville: American Association for State and Local History, 1980.

Krumbein, Jr., William, and Linda Leyva. *The Interpreters' Guide*. Sacramento: California Department of Parks and Recreation, 1977.

Lyon, Gray, Kavanaugh, and Krasnegor. *Better Understanding Learning Disabilities*. Baltimore: Paul H. Brookes Publishing Co., 1993.

Majewski, Janice. *Part of Your General Public is Disabled: A Handbook for Guides in Museums, Zoos, and Historic Houses*. Washington, D.C.: Smithsonian Institution Press, 1987.

Mandill, Colleen J. and Veronica Gold. *Teaching Handicapped Students*. St. Paul: West Publishing Company, 1984.

Mertz, Greg. *An Object in the Hand: Museum Education Outreach for the Elderly, Incarcerated and Disabled*. Washington, D.C.: Smithsonian Institution Press, 1981.

National Assembly of State Arts Agencies and the National Endowment for the Humanities. *Design for Accessibility: An Arts Administrator's Guide*. Washington, DC: National Assembly of State Arts Agencies and the National Endowment for the Humanities, 1994.

National Park Service, Special Programs and Populations Branch. *Interpretation for Disabled Visitors in the National Park System*. Washington, D.C.: U.S. Government Printing Office, 1986.

Oyer, Herbert J. and Jane E. Oyer. *Aging and Communication*. New York: University Park Press, 1976.

Sheetz, Nancy. *Orientation to Deafness*. Des Moines: Allyn and Bacon, 1993.

Smithsonian Institution. *Museums and Handicapped Students: Guidelines for Educators*. Washington, D.C.: Smithsonian Institution Press, 1977.

State of Illinois Department of Conservation. *Mainstreaming Handicapped Individuals: Parks and Recreation Design Standards Manual*. Springfield: State of Illinois Department of Conservation, 1978.

State of California, Department of General Services, Division of the State Architect. *California Access Compliance Reference Manual: A Resource of Access Requirements*. Sacramento: Division of the State Architect, 2003.

Stensrud, Carol. *A Training Manual for Americans with Disabilities Act Compliance in Parks and Recreation Settings*. State College, PA: Venture Publishing, Inc., 1993.

Treiglaff, Michael. *Brookfield Zoo: Disabilities Information*. Chicago: Chicago Zoological Society.

Umbreet, John. *Physical Disabilities and Health Impairments: An Introduction*. Columbus: Charles E. Merrill Publishing Company, 1983.

U.S. Department of Justice, Civil Rights Division. *Americans with Disabilities Act: Questions and Answers*. Washington, DC: U.S. Department of Justice, 2002.

U.S. Department of Justice, Civil Rights Division. *A Guide to Disability Rights Laws* . Washington, DC: U.S. Department of Justice, 2002.

U.S. Department of Justice, Civil Rights Division. *Title II Technical Assistance Manual, with Yearly Supplements*. Washington, DC: U.S. Department of Justice, 1993.

Other Resources

Alta California Regional Center. *Consumer Guide: A Program for People with Developmental Disabilities*. Sacramento: Alta California Regional Center, 1993.

California State Office of Deaf Access. *Deaf Access Assistance Program*. Sacramento: California State Office of Deaf Access, 1992.

National Center on Accessibility, Western Region Interpreters Workshop. *Accessible Interpretation: Resource Materials*. San Diego: April 24-29, 1994.

National Park Service. *Preservation Brief #32: Making Historic Properties Accessible*. September, 1993.

National Park Service. *Preserving the Past and Making it Accessible for People with Disabilities*. October, 1992. Pamphlet.

Self Help for Hard-of-Hearing People, Inc. *Comparison of Large Room Assistive Listening Systems*. June, 1991. Mimeograph.

Access to Parks Guidelines

As stated its introduction, “Access to Parks Guidelines represent a distillation of accessibility standards, recommendations and regulations for compliance with accessibility laws. California State Parks began the process of developing Access to Parks Guidelines in the late 1980s. The first edition was published in 1994, and subsequent revisions have incorporated more comprehensive and up-to-date material. The booklet, Access to Parks Guidelines, is intended for use throughout California State Parks. Many chapters relate to the physical environment and serve as a resource for planners, designers, maintenance staff and contractors. There are also sections that apply to programs and presentations that serve to inform rangers, interpreters and volunteers. The Guidelines correspond to the Department’s access surveys, which were revised in early 2000. The booklet, Access to Parks Guidelines, is the primary tool provided by the Accessibility Program to accomplish its mission.”

The Guidelines were last updated in November 2001, but it is anticipated they will again be updated in 2003. With that in mind, readers of *All Visitors Welcome* should ensure that they are referencing the most current version of the Guidelines, which can be accessed through the state parks website (www.parks.ca.gov).

ACCESS TO PARKS GUIDELINES

Revised and Updated

November 2001

Accessibility Section
Acquisition and Development Division

TABLE OF CONTENTS

Title	Page	Updated
Introduction	i	_____
1. Alarm Systems	1	_____
2. Assistive Listening Systems	2	_____
3. Audio-Visual Programs	3	_____
4. Bathing Facilities	4	_____
5. Beaches and Shores	9	_____
6. Boating	12	_____
7. Buildings	14	_____
8. Campfire Centers / Assembly Areas	17	_____
9. Camping	19	_____
10. Concessions	26	_____
11. Curb Ramps	27	_____
12. Dining and Banquet Areas	29	_____
13. Doorways	30	_____
14. Dormitories / Hotels / Seasonal Housing	32	_____
15. Dressing Rooms	34	_____
16. Drinking Fountains	35	_____
17. Elevators	36	_____
18. Equestrian Facilities	39	_____
19. Exhibits	40	_____
20. Fishing	46	_____
21. Fixed Benches	49	_____
22. Guided / Self-Guided Programs and Tours	50	_____
23. Historic Sites	53	_____
24. Kitchens	56	_____
25. Lifts	58	_____
26. Parking	59	_____
27. Picnic Sites	63	_____
28. Portable Toilets	68	_____
29. Public Telephones	69	_____
30. Publications and Brochures	71	_____
31. Ramps	73	_____
32. Reaches	77	_____
33. Restrooms	78	_____
34. Routes of Travel	85	_____
35. Service Machines	89	_____
36. Signage	91	_____
37. Sinks	93	_____
38. Site Planning	95	_____
39. Special Events	96	_____
40. Stairs	98	_____
41. Storage Areas / Lockers	101	_____
42. Swimming Pools	102	_____

43. Trails ..... 106 _____
44. Visitor Information / Sales Areas ..... 108 _____
45. Vista Points / Overlooks ..... 110 _____
46. Work Areas ..... 112 _____
Glossary ..... 113 _____
Index ..... 119 _____

ERRATA PAGE FOR ACCESS TO PARKS GUIDELINES

Location	Problem	Correction
Page 17	Table (section II, C) is missing a line.	A seating capacity of 301-500 – 6 wheelchair locations
Page 47-48	Section VIII, B is in the wrong place.	Should be in section V, E.
Page 62	Drawing is missing a measurement.	Drawing should note that there be at least 4'0" of sidewalk from the curb ramp to the adjacent back wall.

November, 2001

INTRODUCTION

Our Vision

Universal accessibility is integrated into the Department's culture and embodied in its programs, providing visitors, regardless of their abilities, with high quality recreational opportunities while preserving the integrity of park resources.

Access to Parks Guidelines represent a distillation of accessibility standards, recommendations and regulations for compliance with accessibility laws. California State Parks began the process of developing Access to Parks Guidelines in the late 1980s. The first edition was published in 1994, and subsequent revisions have incorporated more comprehensive and up-to-date material.

The booklet, Access to Parks Guidelines, is intended for use throughout California State Parks. Many chapters relate to the physical environment and serve as a resource for planners, designers, maintenance staff and contractors. There are also sections that apply to programs and presentations that serve to inform rangers, interpreters and volunteers. The Guidelines correspond to the Department's access surveys, which were revised in early 2000.

The booklet, Access to Parks Guidelines, is the primary tool provided by the Accessibility Program to accomplish its mission:

Our Mission

To provide direction, leadership, encouragement and facilitation toward universal accessibility to maximize park visitor opportunities.

Park Accessibility
The concept of access to parks and recreational environments differs significantly from that of access to urban places and services. Accessibility, as used throughout these guidelines, is defined as "the combination of various elements in a building or area, which allows access, circulation and full use of the building, facilities and programs by persons with disabilities." *(T24-202.A)*

In parks and recreational areas, the environment itself frequently offers a wide range of stimuli and challenges. Thus, the concept of individual choice based on the desired degree of challenge must be addressed. For example, the intrinsic qualities of the trail may, of themselves, be the desired goal. Therefore, unlike an urban pathway, the trail is not merely a means of access to a place or activity; it is the place.

Programs and Facilities
These guidelines are intended to ensure that all programs and facilities available to the public shall be accessible for the use and enjoyment of persons with disabilities. In the California State Parks and its concessions this shall include, but not be limited to:

amphitheaters/gathering places
audiotapes
beaches/shores
Cabins/lodgings
camping/picnicking
drinking fountains
equestrian facilities
first aid stations
fishing
food/dining facilities
entrance stations
historic sites and facilities
information stations
interpretive programs
living history programs
marinas
museums
Offices/kiosks/parking
paths/trails
public transportation
restrooms
shops and stores
swimming
telephones
visitor centers
volunteer/docent programs

Source Materials
Applicable guidelines and regulations shall include, but not be limited to:

- Americans with Disabilities Act Accessibility Guidelines (ADAAG)
- ADA, Title II, Technical Assistance Manual (TAM)
- California Building Code (CBC)
- California Code of Regulations (CCR), Title 24 (T24)
    - California Electrical Code (CEC)
    - California Plumbing Code (CPC)
    - California Historic Building Code (CHBC)
- Code of Federal Regulations (CFR)
- Recreational Facilities Proposed Rule (RFP)
- Recommendations for Accessibility Guidelines for Recreational Facilities and Outdoor Developed Areas – 1994 (94 AG)

- Regulatory Negotiation Committee on Accessibility's Guidelines for Outdoor Developed Areas (99 AG)
- Section 504 of the Rehabilitation Act of 1973
- The National Center for Accessibility's Swimming Executive Report (SER)

Updates
These guidelines will be updated periodically by the Accessibility Section as regulations change. All users should send written corrections, suggested changes and additional comments to:

California State Parks
Accessibility Section
One Capitol Mall, Suite #500
Sacramento, CA 95814

For general accessibility questions or to receive this publication in an alternate format, contact the Accessibility Section at (916) 445-8949, e-mail: *access@parks.ca.gov*.

Chapter 1

ALARM SYSTEMS

I. Concept

A. When installing a new alarm system or retrofitting an existing system, the systems should be an accessible design. Please contact the State Fire Marshall for all system requirements.

II. General

A. If provided, audible emergency alarms shall produce a sound that exceeds the prevailing sound level by at least 15 dbA. Sound levels for alarm signals shall not exceed 120 dbA. *(ADAAG-4.28.2)*

B. Where audible alarms are installed, visual alarms must be provided. They are to be flashing white strobe lights located 6" below the ceiling or 80" above the floor (whichever is lower) and must be positioned within 50' of all locations in rooms (including restrooms). *(ADAAG-4.28.1-3/T24-1114B.2.4)*

C. Fire alarm pulls are to be centered at 48" above the floor. *(CEC, Part 3, T24, CCR, Article 760-16)*

Chapter 2

ASSISTIVE LISTENING SYSTEMS

I. Concept

A. Assistive listening devices are used to help individuals hear the programs that State Parks provides. These devices may be permanently installed or portable. Permanent systems are generally installed for specific areas while portable systems allow use for walking tours or similar activities. Typical areas in the parks where assistive listening devices will be used are assembly areas, meeting rooms, campfire centers, visitor centers and museums.

II. Specifications

A. Assistive listening systems shall be installed in theaters, auditoriums, meeting rooms and similar areas when these areas have fixed seats and where audible communications are integral to the use of the space as follows: *(CBC-1105.4.8.2)*

1. Areas with an occupant load of 50 or more.
2. Areas where an audio-amplification system is installed.

B. Theaters, auditoriums, meeting rooms and similar areas not equipped with an audio-amplification system or having an occupant load of less than 50 shall have a permanently installed assistive listening system, or shall have electrical outlets or other supplementary wiring necessary to support a portable assistive listening system. *(CBC-1105.4.8.2)*

C. Receivers for assistive listening systems shall be provided at a rate of 4 percent of the total number of seats, but in no case less than two receivers. *(CBC-1105.4.8.2)*

III. Signage

A. Signage shall be installed to notify patrons of the availability of the listening system. *(CBC-1105.4.8.2)*

Chapter 3

AUDIO-VISUAL PROGRAMS

I. Concept

A. Audio-visual programs are informational, educational, entertaining programs that are transmitted by auditory and/or visual means. This includes, but is not limited to, audiotapes, sound systems, videotapes, films, slides and interactive audio/video displays.

B. Audio-visual programs should be presented and available from accessible locations.

II. Alternative Formats

A. Alternative means of presenting information shall be available: *(Title II TAM-7.1000)*

1. Auditory information (tapes, videos, etc.) should be provided in print, captioned video or graphic visual form.
2. Visual information (films, videos, slides, etc.) should be provided by such means as descriptive audiotapes, Braille publications, etc.

B. An audio description of a film or video should be recorded onto a cassette and be made available with a tape player to visitors with visual impairments. *(Title II TAM-7.1000)*

C. Captioned alternatives should be considered.

1. Closed-captioned video requires a decoding monitor to display the text on the screen.
2. With open-captioned video, the dialogue appears on the screen all the time without the need for decoder equipment.

D. Refer to Assistive Listening Systems, Chapter 2, for appropriate requirements.

III. ASL Interpretation

A. Speakers should be sure to allow extra time between slides for visitors to see the images that have been described. Visitors with hearing impairments may be lip-reading, or they may be watching the oral or American Sign Language (ASL) interpreter. If the room is too dark, a spotlight on the speaker and/or the sign language interpreter may also be necessary. *(Title II TAM-7.1000)*

Chapter 4

BATHING FACILITIES

I. Concept

A. Where facilities for bathing or showering are provided, at least one such facility, and no less than 1% of all facilities, shall conform to the following standards, unless specifically exempted by other portions of these guidelines. *(T24-1115B.6)*

II. Compartment Showers

A. Enclosure/Stall

1. The shower stall space should meet one of the following criteria: *(T24-1115B.6.2.1)*
   a. 42" wide x 48" deep with a minimum 42" opening.
   b. 60" wide x 30" deep with a minimum 60" opening.
   c. 60" wide x 36" deep with a minimum 36" opening.
2. When a threshold or recessed drop is used, it shall be a maximum of ½" in height and shall be beveled or sloped at an angle not exceeding 45°. *(T24-1115B.6.2.2)*
3. Wheelchair transfer onto the shower seat shall be unobstructed by the enclosure. *(T24-115B.6.2.5)*

B. Shower floor:

1. Drain grate openings shall be a maximum of ¼" wide. Drain shall be flush with the floor. *(T24-1115B.6.2.4.4)*
2. Maximum slope of the floor shall be 2% in any direction. *(T24-1115B.6.2.4.4)*
3. Floor surfaces shall be stable, firm and slip resistant. *(T24-1124B.1)*

C. Folding seat:

1. The seat shall extend the full depth of the stall. *(ADAAG-4.21.3)*
2. The seat shall resist a 250 lb. force in any direction. *(T24-1115B.8.3.2)*
3. The seat shall be mounted 18" above the floor and within 27" of the controls. *(T24-1115B.2.4.5.1)*
4. There shall be a minimum 1" and a maximum of 1½" space between the edge of the seat and any wall when the seat is down. *(T24-1115B.6.2.4.5.1)*
5. Water controls shall be located on the side wall adjacent to the seat and mounted between 39" and 41" above the shower floor. *(T24-1115B.6.2.4.1)*
6. The centerline of the controls shall be within a reach range of 18" and 24" from the rear edge of the seat. *(T24-1115B.6.2.4.1)*

7. The seat, when folded, shall extend a maximum of 6" from the wall. *(T24-1115B.6.2.4.5.1)*

D. Accessories: *(T24-1115B.6.2.4.6)*

1. Clothes hooks, if provided, should be at a maximum height of 48" without obstruction.
2. Soap dispensers shall be located on the control wall at a maximum 40" and within reach limits. *(T24-1115B.6.2.4.6)*

E. Doors and Panels:

1. Doors and panels shall be substantially constructed from approved, shatter-resistant materials. Hinged shower doors shall open outward. *(T24-1115B.9.7)*
2. Enclosure shall have a clear, unobstructed opening width of 32" (34" if side opening instead of end opening). *(T24-1115B.7.1.4)*
3. Enclosure shall be equipped with self-closing door that can be opened and latched shut with a closed fist. *(T24-1115B.7.1.4)*
4. Door latch, mounted 30" to 44" above the floor, shall be flip-over, sliding or similar style not requiring grasping or twisting. *(T24-1133B.2.5.1)*
5. The maximum pressure required to open a door must be 5 lbs. or less for interior doors, 8.5 lbs. or less for exterior doors. *(T24-1133B.2.5)*
6. If clothes hooks or shelves are provided, they must be within the following reach ranges: *(T24-1125B.3/T24-1118B.5-6)*
   a. 9" to 54" for side reach.
   b. 34" to 46" for side reach over an obstruction.
   c. 15" to 48" for forward reach.
   d. 20" to 44" for forward reach over an obstruction.
7. The strike edge clearance on the pull side of an interior stall door should be 18" for front approach, 24" for latch approach and 24" for hinge approach. *(ADAAG-4.17.5/ADAAG-4.13.6)*
8. All doors, except the door to the accessible stall, may not encroach more than 12" into the clear space or into space for required fixtures. *(T24-1115B.7.1.1-2)*
9. There shall be a 44" (42" for latch approach) wide access to the accessible stall and a space in front of the accessible stall a minimum of 48" measured at a right angle to the closed door position. *(T24-1115B.7.1.4)*
10. In-swinging doors must leave the 30" x 48" clear space unobstructed. *(T24-1115B.7.2)*

F. Hand-held shower spray unit:

1. A hand-held shower spray unit shall be provided, mounted between 47" and 49", above the floor and with a hose at least 60" long. *(T24-1115B.6.2.4.2)*
2. The hand-held shower must be useable in a fixed position. *(T24-1115B.6.1.5)*

3. Where accessible shower facilities are provided in areas subject to excessive vandalism, in lieu of providing the fixed flexible hose and handheld showerhead required above, two wall-mounted showerheads should be installed. Each showerhead shall be controlled so that it can be operated independently of the other and shall have swivel angle adjustments, both vertically and horizontally. One showerhead shall be located at a height of 47" to 49" above the floor. *(T24-1115B.6.2.4.3)*
4. The hand-held shower spray unit should be located at a maximum of 27" horizontal from the rear of the seat to the centerline of the mounting brackets. *(T24-1115B.6.2.4.2)*

III. Water Controls

A. Water control valves shall be located on the wall adjacent to the seat 39" to 41" above the floor (46" for open showers). *(T24-1115B.6.2.4.1)*
B. The maximum effort to operate controls shall be 5 lbs. *(ADAAG-4.27.4/T24-1117B.6.4)*
C. Controls shall be operable with one hand, not requiring tight grasping, pinching or twisting of the wrist. *(ADAAG-4.27.4/T24-117B.6.4)*
D. Pay coin slots shall be located at a maximum of 40" above the floor adjacent to the folding seat. *(ADAAG-4.27.4/T24-1117B.6.2.4.1)*

IV. Grab Bars

A. Grab bars shall comply with the diameter, loading and projection requirements for toilets.
B. Grab bars shall be mounted 33" to 36" above the shower floor and mounted on the walls adjacent to and opposite of the seat provided in the tub/shower stall. *(T24-1115B.6.2.4.5.2)*
C. An L-shaped grab bar shall be located on the wall opposite of and adjacent to the front edge of the seat. *(T24-1115B.6.2.4.5.2)*
D. Grab bars shall be secured so they do not rotate in their fittings. *(T24-1115B.8.3.5)*
E. Grab bars should be 1¼" to 1½" in diameter or width. The space between the wall and the grab bar should be 1½". *(T24-1115B.8.2)*
F. Grab bar edges shall be rounded and free of sharp or abrasive elements. *(T24-1115B.8.4)*
G. Grab bars shall be capable of supporting a 250 lb. load in any direction. *(T24-1115B.8.3)*

V. Open Showers

A. Where no separate compartment is provided, the accessible shower shall be located in a corner with L-shaped grab bars extending along 2 adjacent walls, except for a 24" back rest space, and with a folding seat adjacent to the shower controls. *(T24-1115B.6.3)*
B. Shower controls for open showers shall be located at a maximum of 46" above the floor. *(T24-1115B.6.3)*

VI. Outdoor Showers

A. Where provided, at least one outdoor shower must be accessible. In order to evaluate the accessibility of outdoor showers (e.g. beach showers) the following items will need to be reviewed and measured utilizing the appropriate portions of the restroom survey or as otherwise noted below:

1. Path of Travel: *(Refer to Routes of Travel, Chapter 34.)*
   a. A minimum diameter of 60" clear space for a wheelchair to make a 360° turn. *(99AG-16.19.1.7/T24-1118B.3)*
   b. The surface must be stable and firm. *(T24-1124B.1)*
   c. The slope shall be 2% (3% for drainage). *(99AG-16.19.1.8)*
2. A fixed showerhead shall be provided and shall be located at a minimum 72" above the ground or floor. *(ADAAG-16.19.2.1)*
3. Shower Controls:
   a. If valves are self-closing, water should remain on for a minimum of 10 seconds. *(99AG-16.19.2-2.6/ADAAG-4.27.3)*
   b. The maximum effort to operate controls should be 5 lbs. or less. *(ADAAG-4.27.4/T24-1117B.6.4)*
   c. Controls must be operable with one hand, not requiring tight grasping or twisting of the wrist. *(ADAAG-4.27.4/T24-1117B.6.4)*
   d. Controls shall be located at a maximum of 46" above the floor. *(T24-1115B.6.6.3)*
4. Grab bars must be provided as follows, either: *(99AG-16.19.2.3-5)*
   a. A vertical grab bar mounted 33" above the floor to extend within 3" below the showerhead.
   b. A circular bar mounted 33" to 36" above the floor from the centerline of the showerhead shall be provided under the showerhead.
   c. A horizontal bar forming a L-shape 36" x 42", with the 36" segment of the L-shaped grab bar attached to the wall as per the Grab Bar requirements in section IV, C.

VII. Signage

A. If the shower is located in a separate facility, there must be a sign displaying the International Symbol of Accessibility (ISA) on the entry door to identify the accessible shower/bathing facility. *(ADAAG-4.30.7)*

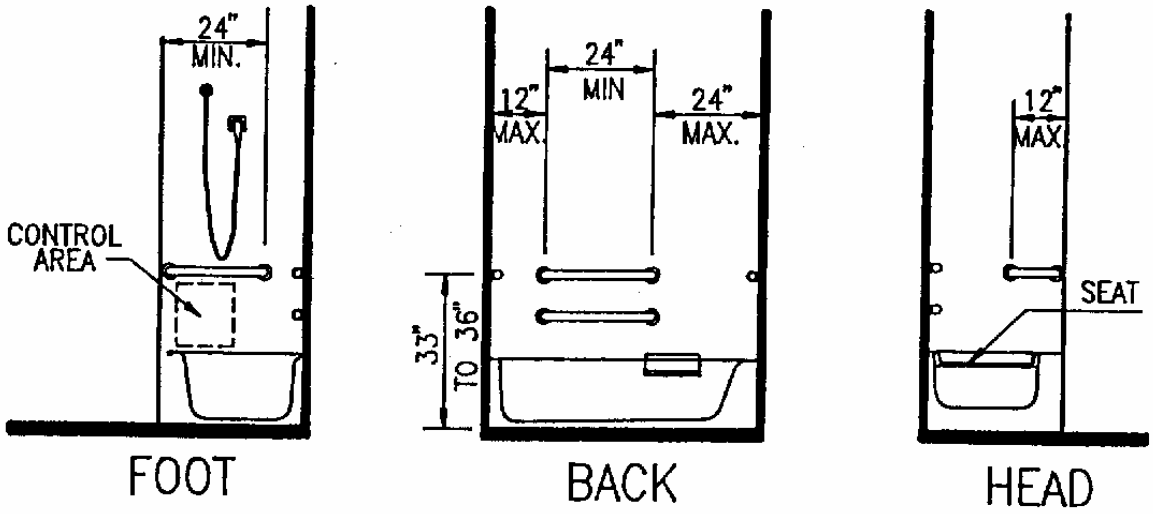

WITH SEAT IN TUB

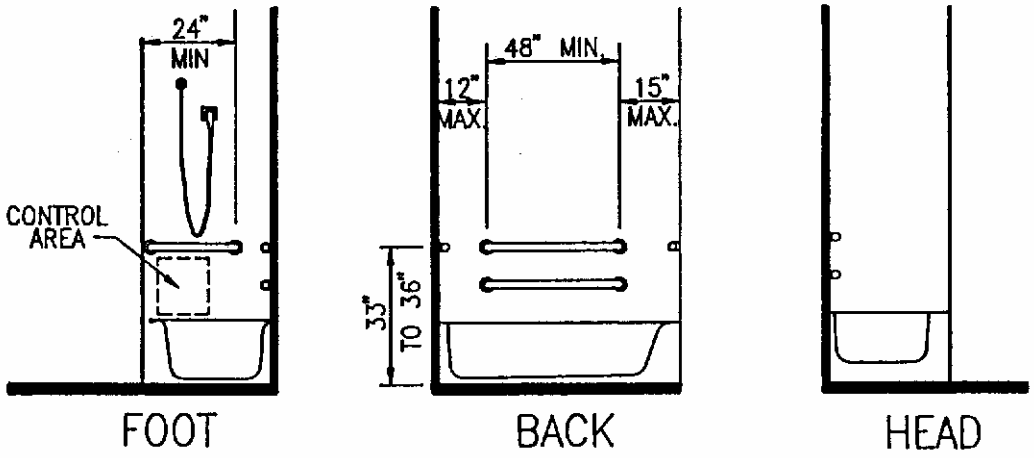

WITH SEAT AT HEAD OF TUB

Chapter 5

BEACHES AND SHORES

I. Concept

A. The major barrier to shore and beach use by persons with mobility impairments is the difficulty in traversing sandy or loose soil. For some water activities, such as fishing or swimming, it is necessary to have direct physical contact with the water from the beach or shore. Access to these activities involves two basic considerations:

1. Access to the edge of the beach or shore, usually from an accessible parking space. These routes must be consistent with the requirements for Exterior Routes of Travel or Outdoor Recreation Access Routes. *(Refer to Routes of Travel, Chapter 34.)*
2. Access across the beach to the element of the activity (the water's edge). These routes are known as Beach Access Routes.

B. All newly constructed beach and shoreline facilities shall have at least one permanently installed Beach Access Route for every ½ mile of linear feet of shoreline. *(99AG-16.4.1.1)*

C. For an existing "designated" beach, when a pedestrian access route is constructed to or along the edge of the beach, a beach access route shall be provided. *(99AG-16.4.1.2)* For additional assistance regarding beach access contact the Accessibility Section.

II. Beach Access Routes

A. The beach access route shall be located in the same area as the general circulation path, when feasible, and shall extend to the high tide level, mean river bed level or the normal recreation pool level. *(99AG-16.4.1)*

B. A Beach Access Route is not required when the pedestrian route along the edge of an existing beach is elevated 6 inches or higher above the beach surface. *(99AG-16.4.1.2)*

C. The minimum clear width of the beach access route shall be 36". *(99AG-16.4.3)*

D. The surface of the beach access route shall be firm and stable. *(99AG-16.4.2)*

E. Edge protection, a minimum of 2" high, shall be provided where drop-offs are 6" or higher. *(99AG-16.4.10)*

F. Drop-offs greater than 1", but less than 6", shall have a beveled edge. *(99AG-16.4.10)*

G. Openings in the route surface, such as on a boardwalk, shall be ½" or less if perpendicular or diagonal to the route. They shall be ¼" or less if parallel to the route. *(99AG-16.4.4)*

H. Objects that protrude into the beach access route with their leading edge between 27" and 80" from the ground, such as a telephone, shall not

protrude more than 4". Objects mounted below 27" may protrude any amount but shall not reduce the clear width of the accessible route. (*99AG-16.4.5/ADAAG-4.4.1*)

I. Vertical clearance on the beach access route shall be 80". If the vertical clearance of an area adjoining the beach access route is less than 80", a cane detectable barrier to warn the visually impaired shall be provided. (*99AG-16.4.5/ADAAG-4.4.2*)

J. The slope for beach access routes must meet one of the following criteria: *(99AG-16.4.8.2.1-3)*
   1. From 0% to 5% slope for any length.
   2. From 5.1% to 8.33% slope for 50'.
   3. From 8.34% to 10% slope for a maximum of 30'.

K. The installation of resting spaces is required as follows: *(99AG-16.4.8.2)*

Percent slope	Maximum length	Rest interval
0% to 5.0%	No restriction	No restriction
5.1% to 8.33%	50'	Every 50'
8.34% to 10%	30'	Every 30'

L. Resting spaces shall be 60" minimum in length, shall have a width at least as wide as the route and have a slope of 3% or less. Exception, the slope of the resting space can be as great as 5% if required for proper drainage. *(99AG-16.4.8.2.2-3)*

M. The cross slope shall be 3% or less, with a maximum of 5% allowed if necessary for drainage. *(99AG-16.4.8.1)*

N. A maneuvering space measuring a minimum of 60" x 60" shall be provided at the end of the beach access route. *(99AG-16.4.7)*

O. If the route is less than 60" wide, passing spaces a minimum of 60" x 60" shall be provided at least every 200'. *(99AG-16.4.6)*

P. All obstacles in the beach access route shall be less than 1" high. *(99AG-16.4.9)*

III. Designated Swimming Areas

A. Depending on safety needs and local site conditions, designated swimming areas should be clearly defined in the water with highly visible floating devices.

B. Depending on safety needs and local site conditions, designated swimming areas should also be identified on shore with clearly visible signage.

IV. Access To Water

A. When feasible, considering site conditions at designated swimming areas, a firm, stable surface should provide access into the water. An additional option may be a beach wheelchair. Contact the Accessibility Section to help determine if water access is necessary and/or feasible in your specific area.

V. Beach Wheelchairs

A. Beach wheelchairs allow assisted access to the beach for people who use wheelchairs. If provided, signage should indicate the availability of beach wheelchairs.

Chapter 6

BOATING

I. Concept

A. Boating facilities include facilities to launch and moor boats and all associated structures such as docks, piers, marinas and gangways. Providing full accessibility to all boating opportunities may not be possible where facilities are located at highly fluctuating water surfaces such as reservoirs with major drawdowns.

II. Boating Facilities Can Consist of the Following:

A. Boat Launch Ramp:
Sloped surface designed for the launch and retrieval of boats.

B. Boat Slip:
Area where boat is tied to a dock or pier for the purpose of embarking and disembarking.

C. Gangway:
Varied slope structure linking a fixed structure or land with a floating structure.

D. Pier:
Structure at which boats are intended to moor for the purposes of embarking or disembarking occupants to the structure.

III. Gangways

A. Gangways are considered to be part of the accessible route and shall comply with ADAAG-4.3. *(ADAAG-15.2.1)*

B. Transition plates are permitted at the top and bottom of the gangway. *(ADAAG-15.2.1)*

C. Extremes in operating conditions require that some exemptions be allowed. *(ADAAG-15.2.1)*

1. Maximum rise of 30" shall not apply to gangways
2. Handrail extensions are not required on gangways and landings where they connect to transition plates and shall not be required on transition plates.
3. Slope of gangway will be permitted to exceed the maximum slope of 8.33% where the linear feet of mooring space is less than 1,000' (approximately 20-30 slips) and the water fluctuation is more than 1'.
4. Slope of the gangway will be permitted to exceed the maximum slope 12.5% where the linear feet of mooring space is less than 3,000' (approximately 50-70 slips) and the water fluctuation is more than 5'.

5. Slope of the gangway will be permitted to exceed the maximum slope 8.33% where the water fluctuation is more than 10'. Providing complying gangway slopes where water fluctuations exceed 10' requires extensive gangway systems and supporting facilities. Although gangway slope will be permitted to be any slope, the gangway may not consist of stairs, since stairs are not permitted to be part of an accessible route.

IV. Boat Slips

A. When boat slips are provided, at least 3%, but no less than one, shall be accessible. Where slip count exceeds 300, a minimum of 2% shall be accessible. *(ADAAG-15.2.2)*

B. Accessible boat slips shall be dispersed throughout the various types of slips that are provided. *(ADAAG-15.2.2)*

C. Where boat launch ramps are provided with boarding piers or docks, at least one accessible slip complying with ADAAG-15.2.3 shall be provided adjacent to the ramp. *(ADAAG-15.2.2)*

D. Accessible boat slip/dock shall have a clear pier width at a minimum 60" wide and as long as the slip. For every 120" of linear length, the boarding pier/dock will have a clear opening of 60". *(ADAAG-15.2.3.1)*

V. Safety

A. Walking surfaces of the facility shall be made of non-slip materials with 2" minimum-high curbs at all water edges where a drop-off exceeds 4", or a wheel guide rail 2" to 4" high (2" with railings). *(T24-1124B.1/T24-1133B.5.4.9)*

B. Horizontal gaps in walking surfaces (e.g. gratings and planks) shall be perpendicular and less than ½" wide. *(ADAAG-16.3.3)*

C. Vertical joints in the surface of the facility (including shore connection) shall have a maximum height of ¼" or, if ¼" to ½", shall be beveled at 50%. *(T24-1133B.7.4)*

D. The walking surface of docks without guardrails has a recommended maximum height of 24" above the water. Edges should be emphasized by use of a color-contrasting strip that is a minimum 2" wide.

E. The dock/pier with water fluctuations should post a sign reading “Caution: Due to fluctuation of water elevation, this dock/pier is only accessible between the tidal elevations of ___ and ___, use with caution”.

Chapter 7

BUILDINGS

I. Concept

A. Access to buildings shall comply with all subsections of Title 24 of the California Code of Regulations. The code specifies all requirements relating to parking, an accessible route of travel, doorways, clear spaces, reaches, as well as elevators, lifts, stairs, telephones and similar specialized facilities. *(99AG/ADAAG-4.3/T24-1114B.1.2)*

B. All buildings, or portions thereof, when constructed or renovated, must be accessible. The only exceptions are for portions of floors not customarily occupied, including elevator pits, piping chases, equipment catwalks and machinery rooms.

C. In general, if fixed facilities, such as cabinets, shelves, closets, drawers, counters, sinks and similar facilities, plus their operating mechanisms and associated controls, dispensers and receptacles are provided in a building, then at least one of each type shall comply with this guideline.

D. This chapter should be used in conjunction with appropriate chapters, including restrooms, kitchens, dining areas etc.

E. Please Note:
These are minimum guidelines only to be used for the purpose of surveying existing buildings and planning for future buildings. The guidelines are incomplete for use in preparing drawings for new or renovated construction. A qualified designer, knowledgeable in all building codes and the various building occupancy requirements, should be utilized or consulted to ensure compliance with all codes. Access compliance shall also be ensured through consultation with the architects in the Accessibility Section, Acquisition and Development Division.

II. Accessible Route of Travel

A. When a building, or portion of a building, is required to be accessible, an accessible route of travel shall be provided to all accessible portions of the building and entrances. *(T24-1103.2.2)*

B. For accessible routes of travel exterior to the building, refer to Parking, Chapter 26; Ramps, Chapter 31 and Routes of Travel, Chapter 34.

C. When only one accessible route of travel is provided, it shall not pass through kitchens, storage rooms, restrooms, closets or other similar spaces, except within an individual dwelling unit *(T24-1103.2.2)*

D. The accessible route, to the maximum extent possible, shall coincide with the route for the general public. Vertical access shall include an elevator, lift or ramp. *(ADAAG-4.3.2)*

III. Doorways

A. Refer to Doorways, Chapter 13.

IV. Clear Spaces

A. In each room, or portion thereof, dedicated to specific functions, there must be a clear space measuring 60" in diameter or a T-intersection with aisles at least 36" wide and 60" long for turning a wheelchair around. These clear spaces must be free of obstructions from the floor surface to a height of 27". *(T24-1118B.2-3)*

B. If a clear space is located in an alcove, there must be an additional clear space provided. *(T24-1118B.4.2)*

C. There must be a clear space at least 30" x 48" (the 48" measured in the direction of the route of travel) that allows either a forward or parallel approach to building facilities or objects such as cabinets, closets and appliances. *(T24-1118B.4)*

V. Aisles and Corridors

A. Every portion of a building shall provide aisles leading to an emergency exit. *(T24-1133B.6.1)*

B. Aisles serving one side must be at least 36" wide. Aisles serving both sides must be at least 44" wide. *(T24-1133B.6.2)*

C. If the building occupancy is 9 persons or less, the building corridors must be at least 36" wide. *(T24-1133B.3.1)*

D. If the building occupancy is 10 persons or more, the building corridors must be at least 44" wide. *(T24-1133B.3.1)*

E. If a corridor is longer than 200', there must be a passing area at least every 200' measuring a minimum of 60" wide or a T-intersection a minimum of 44" wide for two wheelchairs to pass. *(ADAAG-4.3.4/T24-1133B.3.2)*

F. If the turn space on a 90° turn is less than 48", the width of the corridor must be at least 42" on approach and 48" width in the turn. *(ADAAG-4.3.3)*

G. In a corridor configured with a 180° turn, a 36" wide corridor may be permitted, provided that the run length at the 90° turn is a minimum of 48" in length. A run length less than 48" in length at the 90° turn requires a 48" minimum turn width with a 42" minimum corridor width.

H. Objects may not protrude into clear areas with their leading edge between 27" and 80" above the floor for more than 4" into the clear space. *(T24-1121B.1)*

I. Freestanding objects on posts or pylons may overhang 12" or less into clear spaces from a distance between 27" and 80" above the floor. *(T24-1121B.1)*

J. If the clear space is in an alcove for a side approach, which is deeper than 15", there must be an extra 12" of clear space in addition to the standard 48" measurement. If the clear space is in an alcove for a front approach,

which is deeper than 24", there must be an extra 6" of clear space width in addition to the standard 30" clear space measurement. *(T24-1117B.2.4)*

K. The 48" x 30" clear space of the route of travel should be unobstructed by any protruding object mounted with its leading edge at or below 27". *(T24-1118B.41)*

L. Floors of a single story must be on a common level or connected by a ramp, elevator or access lift. *(T24-1120B.1)*

M. If there is less than 80" of clear headroom next to an accessible route, there must be a cane detectable barrier within 27" of the floor. *(ADAAG-4.4.2)*

VI. Reaches

A. Refer to Reaches, Chapter 32.

VII. Floors

A. The floor surfaces must be stable, firm and slip resistant. *(T24-1124B.1)*

B. Changes in level shall be a maximum of ¼" or, if ¼" to ½", shall be beveled at 50%. *(T24-1124B.2)*

C. If a carpet is provided, it must be firmly attached to the floor and have a firm pad or no pad. *(T24-1124B.3)*

D. Carpets must be level cut and have a maximum pile height of ½". *(T24-1124.3)*

E. The edges of carpet must be fastened to the floor with a maximum vertical change from the floor of ¼". *(T24-1124B.2)*

F. Openings in gratings shall be a maximum of ½" in one direction and, if elongated, the length shall be perpendicular to the dominant direction of travel. *(T24-1124B.4)*

VIII. Operating Controls

A. For details on operating controls, refer to appropriate chapters on restrooms, exhibits, etc.

IX. Signage

A. For details on signage see appropriate chapters on signage and restrooms.

Chapter 8

CAMPFIRE CENTERS / ASSEMBLY AREAS

I. Concept

A. Campfire centers and other assembly areas, including theaters, stages and spaces used by performers, are provided to enhance park visitor experiences, through education, entertainment or a variety of other needs. Facilities must be fully accessible to visitors and employees. All campfire centers and other assembly areas, as well as facilities therein, shall be constructed or renovated, taking into account the path of travel (refer to Routes of Travel, Chapter 34) and any ramp requirements. *(99AG/ADAAG-4.3/T24-1114B.1.2)*

II. Seating

A. Accessible seating shall be distributed throughout the area to provide a choice of sight lines. *(ADAAG-4.33.3/T24-1104B.3.5)*

B. Each accessible seating area shall have provisions for companion seating, and shall be located on an accessible route that also serves as an emergency accessible egress. *(ADAAG-4.33.3/T24-1104B.3.5)*

C. Seating Requirement: *(ADAAG-4.1.3(19)(a)/T24-Tbl11B-1)*

Seating Capacity	# of Required Wheelchair Locations
4 to 50	1
27 to 50	2
51 to 300	4
over 500	add 1 per 100

D. At least 1%, but no less than 1, of all fixed seats shall be aisle seats with no armrest on the aisle side, or must have folding or removable armrests on the aisle side. *(ADAAG-4.1.3(19)(a)/T24-1104B.3.4.1)*

E. Accessible aisle seats shall be identified by a sign or marker. *(ADAAG-4.1.3(19)(a)/T24-1104B.3.4.1)*

F. The wheelchair location shall have a minimum clear floor or ground space of 48" deep by 66" wide, if a forward or rear approach. *(T24-1104B.3.6)*

G. The wheelchair location shall have a minimum clear floor or ground space of 60" deep by 66" wide, if side approach. *(T24-1104B.3.6)*

H. If wheelchair-seating locations are not required, removable seats shall be available. *(T24-1104B.3.7)*

I. Proper signage in the lobby or ticket booth area shall indicate seating accessibility. *(T24-1104B.3.4.1)*

J. Semi-ambulant seating shall be provided of up to 1% of the total, but no less than two. Semi-ambulant seats shall have a minimum of 24" of leg

clearance measured from the front edge of the seat to the backrest of the seat immediately in front or nearest obstruction. *(T24-1104B3.8)*

K. Armrests and backrests required with Fixed Bench Seating are not mandatory in a spectator assembly environment.

III. Path of Travel

A. At least one accessible route within the boundary of the site shall be provided from public transportation stops, accessible parking and accessible passenger loading zones, as well as public streets or sidewalks to the accessible entrance they serve. *(99AG/ADAAG-4.3/T24-1114B.1.2)*

B. The accessible route shall, to the maximum extent feasible, coincide with the route for the general public. *(ADAAG-4.3.2)*

C. The minimum clear width of an accessible route shall be 36", except at doorways, which may be 32". *(ADAAG-4.3.3)*

D. If an accessible route has less than 60" clear width, passing spaces at least 60" x 60" shall be located at reasonable intervals not to exceed 200'. A T-intersection of 2 corridors or walks is an acceptable passing place. (An accessible route shall connect wheelchair-seating locations with performing areas, including stages and other spaces used by presenters). *(T24-1104B.3.10-11)*

E. Where it is technically infeasible to alter all performing areas to be on an accessible route, at least one of each type of performing area should be made accessible.

F. All wheelchair seating should adjoin an accessible route that can also serve as a means of egress in case of emergency. *(ADAAG-4.33.3/T24-1104B.3.5)*

IV. Listening Systems

A. Refer to Assistive Listening Systems, Chapter 2.

Chapter 9

CAMPING

I. Concept

A. Where camping (tent sites, RV or trailer sites, cabin, tent platform or other camping shelter sites) is provided, accessible sites shall be provided for each type of site according to the following guidelines. *(99AG-16.17)*

B. The minimum number of sites shall comply with the following: *(99AG-16.17.1)*

Number of Camping Spaces	Number of Accessible Camping Spaces (Tent, RV, Shelters)
1	1
2 to 25	2
26 to 50	3
51 to 75	4
76 to 100	5
101 to 150	7
151 to 200	8
201 to 300	10
301 to 400	12
401 to 500	13
501 to 1000	2% of total
1001 and over	20 plus 1 for each 100 over 1000

C. All elements of an accessible site shall be accessibly designed. In addition, there shall be accessible routes from the campsite to its own parking, utilities, site furnishings, an accessible restroom and, if present, a campfire center. *(99AG-16.17.1)*

II. Parking Space

A. The parking space shall be 17' wide x 18' long (for RV sites, the recommended minimum is 20' wide x 24' long) and adjacent to campsite or picnic areas. Slope shall not exceed 2% (1:50) except for drainage, where it may be up to 3% (1:33). The surface shall be firm, hard-packed or paved. *(99AG-16.17.2.3/T24-1124B.1/T24-1129B.4.2)*

III. RV Camping

A. Hook-ups and campsite furniture shall be accessibly designed. *(Contact the Accessibility Section.)*

B. If an accessible pull-through campsite is provided, then the pull-through area shall be a minimum 20' wide for the entire length. *(99AG-16.17.2.1)*

IV. **Site Planning** (See Drawing)

A. Accessible sites shall represent the range of sites in the campground (e.g. water view, secluded, etc.).

B. If tent sites are provided, they should have an 18' x 18' firm, but not paved, tent/sleeping pad adjacent to table/cooking area. Camp and tent site slope shall not exceed 2%, if needed for proper drainage, 3% is acceptable. *(99AG-16.17.3)*

C. If tent sites are provided, the ground must be firm and stable, and designed to allow the use of tent stakes. *(99AG-16.17.3.2)*

D. If a raised tent platform is provided, there must be a minimum 3" edge protection. *(99AG-16.17.3.6)*

V. **Picnic Tables** (See Drawing)

A. Picnic tables shall have a minimum 36" clear hard surface walking area all around. Trash receptacles, barbecues, etc. shall not encroach on this space. *(99AG-16.5.5-6)*

B. Picnic tables and benches shall have rounded corners with no sharp edges or protruding hardware, such as bolts.

C. The distance from the ground to the table top work surface shall be between 28" and 34" (32" recommended). *(T24-1104B.5(6)/T24-1122B.4)*

D. Tables shall have a 27" minimum knee clearance from surface grade (29" clearance is recommended). *(99AG-16.5.4)*

E. Picnic tables shall have a 19" clear horizontal knee space under the table. *(99AG-16.5.4)*

F. Tables shall have at least a 30" wide clear space beneath the table. *(99AG-16.5.4)*

G. The maximum slope around the picnic table shall not exceed 2%, 3% is acceptable for proper drainage. *(99AG-16.5.7)*

VI. **Grills, Fire Rings and Fireplaces** (See Drawing)

A. Grills, fire rings and fireplaces shall be placed so there is a 48" clear space 360° surrounding the cooking facility. A distinctive textured firm surface around heating/cooking facilities may be helpful for the visually impaired and is recommended. *(99AG-16.6.5)*

B. It is recommended that grills and fireplaces have an adjacent horizontal surface at least 8" wide on which hot objects may be placed.

C. Fire rings shall be 20" to 24" to the top from the outside ground. *(99AG-16.6.5)*

D. Where a raised edge or curb is provided on a fire ring, the distance from the outside edge of the fire ring to the fire building surface shall not exceed 24". *(99AG–16.1.5/ADAAG-4.2.6*)

E. The fire building surface of a fireplace or fire ring must be at least 9" from the ground.

F. The cooking surface of post-mounted grills shall be between 15" and 34" above adjacent grade, with unobstructed access by horizontal reach from a standing or seated position. *(99AG-16.7.3G)*

G. When the grill is built into a fireplace, the cooking surface shall be between 15" and 34" above the adjacent grade. Fire building surface of fireplace must be 9" from the ground. *(99AG-16.6.4/99AG-16.7.3)*

H. The cooking facility shall be surrounded by a firm, stable ground surface. *(99AG-16.7.5)*

I. The maximum slope of the clear space surrounding the cooking facility shall be 2%, with 3% allowed for drainage. *(99AG-16.6.6)*

VII. Water Faucets (See Drawing)

A. Faucets shall be located adjacent to a clear, stable, firm ground surface area at least 60" x 60" in size. Faucets shall be configured to allow a forward approach. *(99AG-16.16.3)*

B. A 2% slope shall be allowed to drain toward the faucet drain (3% slope when necessary for drainage). Drain grating shall have a maximum opening of ½". *(99AG-16.16.4/T24-1124B.4)*

C. The faucet lever(s) shall be located 28" to 36" above the ground (does not apply to hand pumps) and shall be operated by a push button or lever actuator that requires no more than 5 lbs. of pressure. *(99AG-16.16.2-3/ADAAG-4.27.4)*

D. The faucet should be equipped with a top protrusion to hold bucket handles.

VIII. Trash Receptacles

A. Trash receptacles shall be located on an access route from the campsite. *(99AG-16.8.1)*

B. Outdoor trash receptacles (dumpsters or cans) shall have an opening at a maximum height of 36" above the adjacent grade. Animal exclusion receptacles need not meet this guideline. *(ADAAG-4.27.4)*

C. If so equipped, both outdoor and indoor (e.g. restrooms) trash receptacles shall operate with a single hand manipulation requiring no more than 5 lbs. of pressure. *(ADAAG-4.27.4)*

D. Trash receptacle operating mechanisms shall be a maximum of 40" above the adjacent grade.

E. There shall be at least 30" x 48" of stable, firm, clear space to approach the trash receptacle. The maximum slope of the clear space shall be 2%, with 3% acceptable for proper drainage. *(99AG-16.8.2-4)*

IX. Signage

A. Accessible camping spaces shall be designated by the International Symbol of Accessibility (ISA). *(99AG-16.17.1.3)*

B. Signage <u>is not required</u> where sites are <u>assigned</u> upon arrival or through a reservation system, or where all sites are accessible. *(99AG-16.17.1.3)*

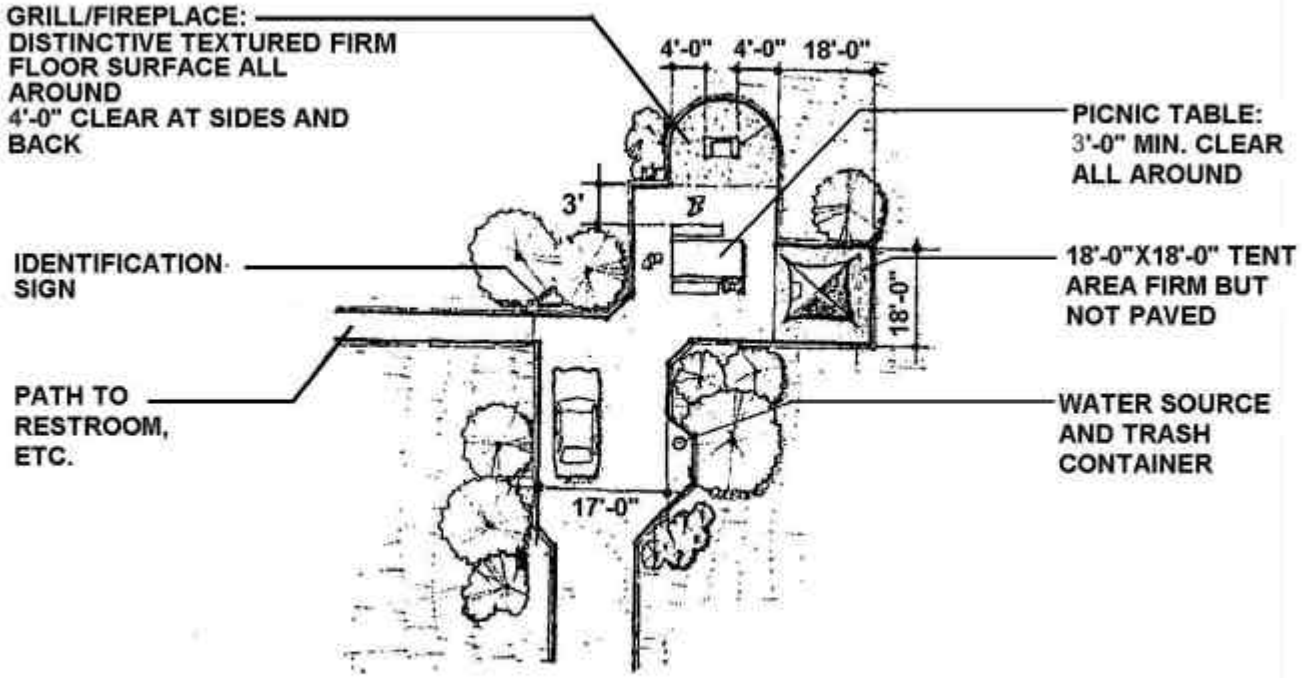

NOTE: INSTALL ALL ACTIVITY SPACES AT MAXIMUM 2% SLOPE IN ANY DIRECTION.

TENT CAMPING AREA

PICNIC AREA SIMILAR

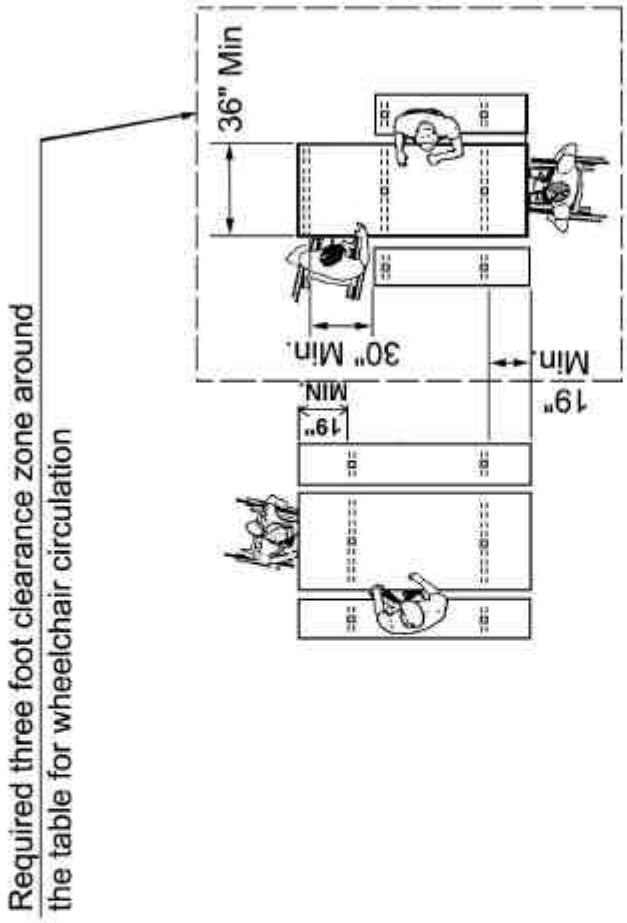

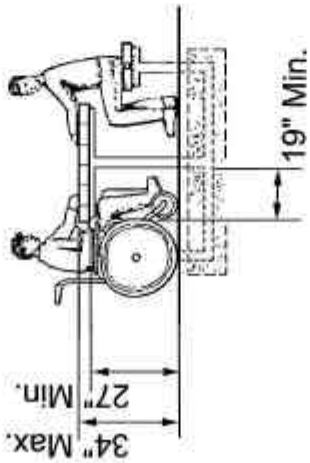

PICNIC TABLE

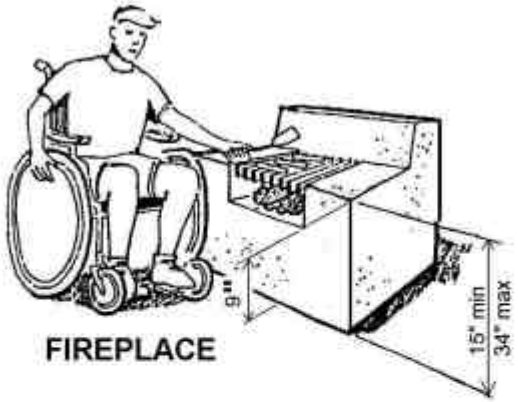

Notes: Side tables are not required but they are recommended on at least one side.

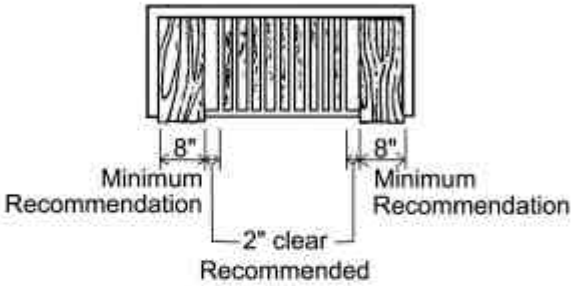

Provide a 4'-0" clear space on all sides around all fire ring and grill spaces for circulation.

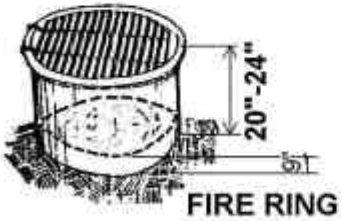

NOTE: FIRE SURFACE AT FIRE RING SHALL BE AT 9" ABOVE ADJACENT GRADE

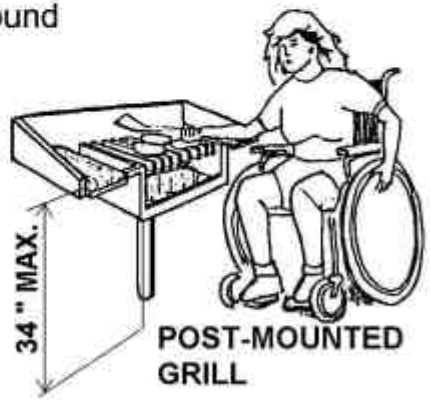

Fireplaces, Fire rings and Post Mounted BBQ Grills

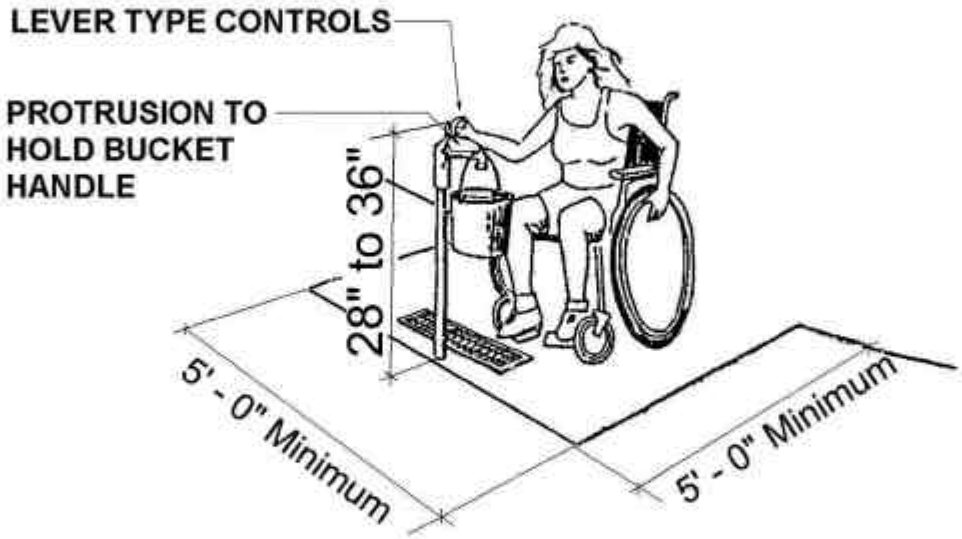

Water Faucet

Chapter 10

CONCESSIONS

I. Concept

A. All new concessions contracts held by the Department will be in compliance with accessibility standards established by Federal, State and Department mandates.

B. All new concession contracts must include the following Concessions boilerplate paragraph:

AMERICANS WITH DISABILITIES ACT:
"Without limiting Concessionaire's (Operator, Lessee) responsibility under this Agreement for compliance with all laws, with regard to all operations and activities that are the responsibility of Concessionaire under this Agreement, Concessionaire shall be solely responsible for complying with the requirements of the Americans With Disabilities Act of 1990 ["ADA"] (Public Law 101-336, commencing at Section 12101 of Title 42, United States Code (and including Titles I, II, and III of that law)), and the Rehabilitation Act of 1973, and all related regulations, guidelines, and amendments to both laws."

The Concessionaire's boilerplate language is located in the Concession share file in the Department Wide Area Network (WAN). The Americans with Disabilities Act boilerplate language starts on page 52. This boilerplate language will contain the most recent revisions and can be downloaded from the Concessions share file for inclusion in the new concession contracts.

Chapter 11

CURB RAMPS

I. Concept

A. Curb ramps are required to be located at pedestrian crosswalks and wherever the accessible path of travel requires the pedestrian to transition from, through or onto a raised curb. *(ADAAG-4.7.1/T24-1127B.5.1)*

B. Wherever street surfaces are marked for a pedestrian crosswalk, the curb ramp must terminate within the crosswalk area. *(ADAAG-4.7.9/T24-1127B.5.1)*

C. Curb ramps shall be located to prevent obstruction by parked cars. *(ADAAG-4.7.8/T24-1127B.5.9)*

II. General

A. The minimum width of the curb ramp shall be 48". *(T24-1127B.5.2)*

B. The maximum slope of the curb ramp shall be 8.3%. *(T24-1127B.5.3)*

C. Where fanned or flared sides are installed to adjoin the curb ramp, the maximum slope of the flared sides shall be 10%. *(T24-1127B.5.3)*

D. A level landing 48" deep shall be provided at the upper end of each curb ramp over its full width <u>or</u> the slope of the fanned flared sides cannot exceed 8.33%. (T24-1127B.5.4)

E. The slope of the adjoining gutters, road surfaces and the accessible route at either end of the curb ramp shall have a maximum slope of 5% for a minimum run of 48". *(T24-1127B.5.3)*

F. The transition from curb ramps to walks, gutters or streets shall have no abrupt changes. However, the lower end of the ramp shall have a ½" high lip beveled at 45% as a detectable way of finding the edge for persons with visual impairments. *(ADAAG-4.7.2/T24-1127B.5.5)*

G. The surface of the curb ramp and its flared sides shall be stable, firm and slip resistant. It shall also be of a contrasting finish from that of the adjacent sidewalk. *(ADAAG-4.5.1/T24-1127B.5.6)*

III. Details

A. Curb ramps shall have a grooved border 12" wide at the level surface of the sidewalk along the top and each side of the ramp with grooves spaced ¾" apart and ¼" deep. *(T24-1127B.5.7)*

B. Curb ramps having a slope of less than 6.7% shall have a detectable warning in the form of truncated domes that extends the full width of the ramp inside the grooved border. *(T24-1127B.5.8)*

C. Built up curb ramps shall be located outside vehicular traffic lanes, parking spaces and access aisles. *(ADAAG-4.7.6/T24-1129B.4.3)*

IV. Diagonal Ramps

A. Well-defined edges of diagonal (corner type) ramps shall be parallel to the direction of traffic flow. *(ADAAG-4.7.10/T24-1127B.5.10)*

B. There shall be a 48" minimum clear space at the bottom of diagonal curb ramps. The clear space must be located within the marked crossing, if marked crossings are provided. *(T24-1127B5.10)*

C. Where provided, flared sides on the diagonal curb ramps shall have 24" long segments of straight curb on each side of the curb ramp. The flared sides shall be within the marked crossing. *(ADAAG-4.7.10/T24-1127B.5.10)*

V. Islands

A. If an island exists, and the curb ramp is part of the island, there shall be either an accessible path cut through the island at street level or curb ramps on both approach ends with a 48" wide level area in between. *(ADAAG-4.7.11)*

Chapter 12

DINING AND BANQUET AREAS

I. Concept

A. Dining and banquet facilities shall be made accessible to persons with disabilities, including food service and sales counters, with appropriate seating and wheelchair areas.

B. There shall also be an accessible route of travel to and from the dining/banquet area. (Refer to Routes of Travel, Chapter 34.)

II. Seating

A. Wheelchair access shall be provided to all areas. Each dining or banquet area shall have one wheelchair seating for every 20 seats, with at least one wheelchair seating space per functional area. *(Refer to Buildings, Chapter 7.) (T24-1104B.5.4)*

B. Access to such seating shall be provided with main aisles no less than 36" in clear width. Accessible seating spaces shall be integrated with general seating to allow a reasonable selection of seating areas and to avoid having one area specifically highlighted as the area for persons with disabilities. *(T24-1104B.5.4)*

III. Knee Clearance

A. Knee space at tables and counters shall be a minimum of 27" high (recommended 29"), 30" wide and 19" deep. *(T24-1122B.3)*

B. Knee clearance is not required at a checkout counter or service counter. *(T24-1122B.3)*

IV. Height of Tables/Counters

A. The tops of tables and counters shall be 28" to 34" above the floor or ground. *(T24-1122B.4)*

V. Reach

A. Tableware, dishware, condiments, food, beverage shelves and dispensing devices shall be located within accessible reach ranges. *(Refer to Reaches, Chapter 32.)*

Chapter 13

DOORWAYS

I. Concept

A. Doorways are an integral part of the route of travel and should be considered for accessibility whether they are on interior building routes or on exterior routes. Doorways are also used as emergency exits and shall be accessible as part of the evacuation plan for the facility.

II. Access Routes

A. All entrances and exterior ground floor exit doors shall be accessible. During periods of partial or restricted use, doorways that are primary entrances shall be accessible. *(T24-1133B.1.1.1.1-2)*

B. An accessible door or gate shall be made available adjacent to each turnstile exit or entrance. These doors or gates shall remain unlocked during business hours and shall not activate an alarm audible to the general public. *(T24-1133B.2.3.4)*

III. Surfaces

A. Doormats that are recessed shall be adequately anchored to prevent interference with wheelchair traffic. *(T24-1133B.1.1.1.3)*

IV. Clearances

A. Doorways shall allow for the installation of a door 80" high and 36" wide. *(T24-1003.3.1.3a/T24-1133B.2.2)*

B. The clear opening of doorways shall be no less than 32". Clear width is measured parallel to the threshold, from the inside edge of the doorstop on the strike-side to the door edge, with the door opened perpendicular to the threshold. *(T24-1133B.1.1.1.1/T24-1133B.2.3-3.1)*

C. If the depth of the doorway opening is greater than 24", there must be a minimum aisle width of 60". *(T24-1118B.2/T24-1133B.1.1.1.1)*

D. There must be a level, clear area on both sides of the door and measuring 60" in the direction of the door swing (swing side) and 48" opposite the direction of the door swing (non-swing side), measured at right angles to the plane of the door when closed. The level clear space must be as wide as the door plus a required strike-edge clearance space. Strike-edge clearance is the clear space at the latch side of the door. Strike-edge clearance varies with the type of door and approach as follows: *(T24-1133B.2.4.2-4)*

1. Front approach door on swing side – 18" minimum strike edge of interior door, 24" exterior door, with 24" preferred.
2. Front approach door on non-swing side – 12" minimum strike edge.
3. Latch side approach on swing side – 24" minimum strike edge.

4. Latch side approach on non-swing side – 24" minimum strike edge.
5. Hinge side approach on swing side – 36" minimum strike edge.
6. Hinge side approach on non-swing side – 0" minimum strike edge, but total width must be 54" or greater.

V. Thresholds

A. Thresholds shall have a maximum height of ½". A change in level between ¼" and ½" shall be beveled with a slope no greater than 50%. Changes in level greater than ½" shall be accomplished by means of a ramp. *(T24-1133B.2.4.1)*

VI. Hardware

A. Opening hardware must be between 30" and 44" above the floor. *(T24-1133B.2.5.1)*

B. Openers must not require tight grasping, pinching or twisting of the wrist to operate. *(ADAAG-4.13.9/T24-1133B.2.5.1)*

C. When siding doors are fully open, operating hardware must be exposed and usable from both sides. *(ADAAG-4.13.9)*

D. Interior doors must not require more than 5 lbs. of force to operate, exterior doors must not require more than 8½ lbs. to operate. When fire doors are required, the maximum force to operate the door may be increased to the minimum allowable by the appropriate administrative authority not to exceed 15 lbs. *(T24-1133B.2.5)*

E. Automatic or power assisted doors shall not open faster than 3 seconds and shall not require more than 15 lbs. of pressure to stop the door movement. *(ADAAG-4.13.12)*

F. If the door has a closer, it must take at least 3 seconds to move the door from an open position at 70° to a point 3" from the latch measured to the leading edge of the door. *(ADAAG-4.13.10)*

VII. Kickplates

A. The bottom 10" of all doors, except automatic and sliding, shall have a smooth, uninterrupted surface to allow the door to be opened by a wheelchair footrest without creating a trap or hazardous condition. *(T24-1133B.2.6)*

VIII. Signage

A. Accessible building entrances shall be identified with the International Symbol of Accessibility (ISA). *(T24-1117B.5.7)*

Chapter 14

DORMITORIES / HOTELS / SEASONAL HOUSING

I. Concept

A. Dormitories and similar places of seasonal lodging shall have the following sleeping places accessible together with their sanitary facilities. *(Refer to Restrooms, Chapter 33.) (ADAAG-9.1.1/T24-1111B.2/T24-1111B.4.2)*

Total Number of Sleeping Places	Fully Accessible Locations	Plus Additional Places with Roll-In Showers	Plus Accessible to Hearing Impaired
1 to 25	1	0	1
26 to 50	2	0	2
51 to 75	3	1	3
76 to 100	4	1	4
101 to 150	5	2	5
151 to 200	6	3	6

B. Accessible sleeping places shall be dispersed among the various classes of sleeping accommodations to provide a range of options applicable to size and amenities provided. *(T24-1111B.4.1)*

C. Seasonal housing, including units, sleeping rooms, suites and common areas, shall be on an accessible route of travel. *(Refer to Buildings, Chapter 7 and Routes of Travel, Chapter 34.) (T24-1114B.1-2)*

D. Parking and common use recreation facilities shall be accessible. *(T24-1129B.1)*

II. Specifications

A. Accessible sleeping rooms shall provide a minimum clear 36" wide maneuvering space located along both sides of a bed. *(ADAAG-9.2.2(2)/T24-1111B.4.3)*

B. Each accessible sleeping area shall have visual fire alarms and notification devices to alert room occupants of incoming telephone calls or a knock or doorbell. *(ADAAG-9.3.1/T24-1111B.4.5./T24-1114B.2.4)*

C. Additional rooms for the hearing impaired shall be provided (refer to chart). *(T24-111B.4)*

D. Doors and doorway passages must be accessible. *(Refer to Doorways, Chapter 13.)*

E. Bathroom doors must open in a way that does not interfere with clear space required near any fixtures. *(T24-1111B.4.6.1)*

F. Bathrooms must provide a minimum of 30" x 60" clear floor space. *(T24-1111B.4.6.7/ADAAG-9.2.2(6)(e))*

G. There should be at least one accessible bathtub or shower in each sleeping room. *(T24-1111B.4.6.6)*

H. There should be at least one roll-in shower for a building with 51 to 100 sleeping rooms and two for those with 101 to 200.

III. Miscellaneous

A. As needed, refer to chapters on Storage Areas, Reaches, Service Machines, Public Telephones, Kitchens and/or Alarms.

Chapter 15

DRESSING ROOMS

I. Concept

A. If permanent dressing rooms are provided at the site, regardless of location, they shall be constructed and comply with all subsections of Title 24 of the California Code of Regulations. *(T24-1110B.1.7)*

B. Dressing rooms shall be accessible and on an accessible route of travel. *(T24-1114B.1.2)*

C. The minimum number of dressing rooms made accessible shall be 5%, but never less then 1 for each type of use in each cluster of dressing rooms. *(T24-1110B.1.7)*

II. Amenities

A. Fixed benches shall be at least 24" wide and 48" long and set 17" to 19" above the finished floor elevation along the wall with the longest dimension. *(T24-1110B.1.7)*

B. Fixed benches shall have a slip resistant surface, not allow water collection and resist 250 lbs. force in any direction. *(ADAAG-4.35.4/T24-1115B.8.3.3)*

C. Clothing hooks, when provided, shall be located no greater than 48" above the finished floor elevation. *(T24-1110B.1.7)*

D. Mirrors, when provided, shall be located adjacent to and usable from the bench and standing position and measure at least 18" wide and 54" long, with the lower edge within 20" from the finished floor elevation. *(T24-1110B.1.7)*

III. Clear Spaces

A. Dressing rooms shall have a 60" x 60" clear space, unobstructed by an inward swinging door. *(T24-1110B.1.7)*

B. Clear floor space shall be provided alongside the bench to allow for a parallel transfer from a wheelchair to the bench. *(T24-1110B.1.7)*

IV. Entry

A. Refer to Doorways, Chapter 13.

Chapter 16

DRINKING FOUNTAINS

I. Concept

A. Where drinking fountains are provided, there shall be a drinking fountain that is accessible to individuals who use wheelchairs.

B. The drinking fountain must be on an accessible path of travel. *(Refer to Routes of Travel, Chapter 34.)*

II. Wall Mounted Units and Post Mounted Units

A. Where only one drinking fountain is provided, the use of a “Hi-Low” fountain can be used for accessibility. *(T24-1117B.1.1)*

B. If more than one drinking fountain is provided, at least 50% must be accessible. *(ADAAG-4.1.3(10))*

C. The fountain shall not encroach into an accessible route. *(T24-1117B.1.2)*

D. There shall be a clear, level space of at least 30" x 48" in front of the fountain. This surface should be firm, stable and slip-resistant. *(T24-1117B.6.2/T24-1118B.4)*

E. The fixture shall be a minimum 18" deep. *(CPC-1507.3.1)*

F. Clear knee space beneath the fountain shall be a minimum of 27" high, 30" wide and 8" deep, with additional minimum toe space of 9" high by 17" deep. *(CPC-1507.3.1)*

G. The water nozzle shall be located a maximum 36" above the ground and a maximum 6" from the front of the unit, with the water flow direction parallel to the front edge of the unit and to a 4" height minimum. *(ADAAG-4.15.2-3/CPC-1507.3.3)*

H. Activation shall be by means of lever controls or a wide, non-recessed press bar located at a maximum of 6" from the front edge of the unit and requiring no more than 5 lbs. of pressure, without tight grasping, pinching or twisting hand motion. *(ADAAG-4.15.3/CPC-1507.3.4/T24-1117B.6.4)*

III. Wall Mounted Units

A. Where provided, wall mounted units shall be located completely within an alcove, or with wing walls, or so as not to encroach into pedestrian ways. *(T24-1117B.1.2)*

1. Alcove or wing wall of fountain shall be no less than 32" wide and 18" deep. *(T24-1117B.1.2)*

Chapter 17

ELEVATORS

I. Concept

A. Elevator cars and user operated systems and controls shall be accessible to users with disabilities and shall meet the provisions of the current edition of the California Building Code (Title-24, California Code of Regulations) Chapter 30 and the general requirements as follows.

B. Exceptions to these provisions shall apply to existing buildings when legal or physical constraints will not allow compliance with these regulations or equivalent facilitation without creating an unreasonable hardship. Determination of unreasonable hardships or physical constraints shall be subject to approval by the authorizing agency having jurisdiction or the building official. *(T24-3003.4.1(a))*

II. Automatic Operation

A. Elevators shall be automatic with a self-leveling feature that brings the car level to the floor landings within a tolerance of ½". The clearance between the car platform sill and edge of the hoist way landing shall be no greater than 1¼". *(T24-3003.4.2)*

III. Doors

A. Elevator doors shall be power-operated, horizontally sliding type, opened and closed by automatic means and provide a minimum 36" clear width when open. *(T24-3003.4.3-4)*

B. The minimum time for elevator doors to remain fully open in response to a car call shall be 5 seconds. *(T24-3003.4.6.2A)*

C. A door re-opening device shall be provided, which will function to stop and reopen the car door and adjacent hoist way door, in case the car door is obstructed while closing. Door reopening devices shall be mounted between 5" and 29" from the floor, be capable of sensing an object in the path of the closing door without requiring contact with the object and remain effective for a period no less than 20 seconds before the door may re-close. *(T24-3003.4.5)*

D. There shall be an emergency communication device that does not require voice communication. *(ADAAG-4.10.4/T24-3003.4.7B)*

IV. Car Dimensions

A. Elevator cars shall have a clear distance between walls or between a wall and door of at least 80" wide and 54" deep for center opening doors and 68" wide and 54" deep for side opening doors. *(T24-3003.4.7B)*

B. The minimum depth from the back wall to the front wall door return panel shall be 51". *(T24-3003.4.7B)*

C. A handrail shall be located between 31" and 33" above the floor on at least one wall of the car. The rails shall be smooth with the inside surface at least 1½" clear of the wall. *(T24-3003.4.12)*

V. Floor Finish

A. Floor covering shall have a non-slip hard surface that permits easy movement of wheelchairs and, if carpet is used, it shall be securely attached, tightly woven, low pile and without padding. *(T24-3003.4.11)*

B. Elevator floors which are grated shall have spaces a maximum of ½" in a single direction. *(T24-1124B.4)*

VI. Car Illumination

A. Illumination in the elevator car should not be less than 5 foot-candles.

VII. Interior Controls

A. Elevator floor buttons shall be a maximum of 48" above the floor (measured to the center of the highest button) for a front approach (54" for a side approach). *(T24-3003.4.7A)*

B. Emergency controls, including the emergency alarm, door open, door close and stop, shall be grouped at the bottom of the control panel and be a minimum of 35" above the floor (measured to the center of the lowest button). *(T24-3003.4.7A)*

C. Floor buttons shall visually indicate when a call is made and extinguish when a call is answered. *(T24-3003.4.7A)*

D. Control buttons shall be a minimum ¾" diameter, raised ? "-? " above the surrounding surface, be illuminated, have square shoulders and be activated by a mechanical motion that is detectable. *(T24-3003.4.8A)*

E. Buttons shall be accompanied on the left by a white on black background with standard Arabic numeral or standard symbol a minimum of ? " high and raised ? "-? ". *(T24-1117B.5.5-6/T24-3003.4.8A)*

F. A Braille symbol shall be located immediately below the numeral or symbol. *(T24-3003.4.8A)*

G. The call button for the main entry floor shall be designated by a raised star at the left of the floor designation. *(T24-3003.4.8A)*

H. A minimum of ? " separation between rows of control buttons must be provided. *(T24-3003.4.8A)*

VIII. Emergency Phone

A. An emergency telephone handset shall be provided within 48" of the floor and with a cord a minimum of 29" long. *(T24-3003.4.7B)*

B. If the phone is in a closed compartment, the compartment shall be easily opened with a lever or other type of hardware not requiring tight grasping, pinching, twisting or unlocking. The compartment shall be marked with an emergency telephone symbol raised ? "-? ". *(ADAAG-4.10.14/T24-1117B.6.4/T24-3003.4.7B)*

IX. Interior Indicators

A. A car position indicator (floor numeral) a minimum ½" high with a contrasting background shall be located above the car operating panel or over the door opening. As the car passes or stops at a floor served by the elevator, the corresponding numerals shall illuminate and an audible signal greater than 20 dbA shall sound. *(T24-3003.4.9)*

X. Exterior Controls

A. Elevator call buttons shall be located within 42" above the floor (measured to the center of the highest button), be a minimum of ¾" diameter and be raised ? " to ? ". *(T24-3003.4.9B)*

B. Controls shall provide visual indication when call buttons are activated and when the call is answered. Objects adjacent to or below the call buttons shall not project more than 4" from the wall. *(T24-3003.4.9B)*

XI. Exterior Indicators

A. A visual and audible signal shall be provided at each elevator entrance either adjacent to the door or on the car door jams indicating the car answering the call and its direction. *(T24-3003.4.9B/T24-3003.4.15A)*

B. The audible signal shall be no less than 20 dbA. *(T24-3000.4.9B)*

C. The signal shall be a minimum of 2½" x 2½" in size, have a centerline a minimum of 72" above the floor and be visible from the call button proximity. *(T24-3000.4.9B)*

D. The audible signal shall differentiate between up and down. *(T24-3000.4.9B)*

E. Elevator landing jams on all floors and at both sides of the door shall have the number of the floor indicated by a raised Arabic numeral a minimum 2" high and located approximately 60" above the floor. *(T24-1117B.5.2/T24-3003.4.16A)*

F. Raised Braille symbols shall be placed directly to the left of the corresponding Arabic numerals. Raised characters shall be on a contrasting background. *(T24-3003.4.16A)*

Chapter 18

EQUESTRIAN FACILITIES

I. Concept

A. Equestrian activities consist of either the facility to rent and ride or equestrian use that allows the visitor to bring his/her horse and trailer to ride.

B. Access to equestrian activities involves two basic considerations:

1. Access to the place where horses are available.
2. Transfer capabilities onto and off of the horse that are safe and secure. Such transfer shall be accomplished by one of three methods:
   a. Raising the level of the rider to that of the horse's stirrups – by using a mounting platform.
   b. Lowering the level of the horse in respect to the level of the rider – such as a 2' deep ground recess for the horse.
   c. Providing a combination of (a) and (b).

II. Location

A. Equestrian facilities shall be located on a continuous access network with appropriate support facilities such as signage, route of travel, restrooms and parking.

III. Mounting Platform

A. An accessible mounting platform should be provided to facilitate movement to and from the horse. It shall have:

1. A platform height above grade 24" to 28" as measured at the place of mounting the horse.
2. Access to the platform can be by means of a ramp with a maximum slope of 8.33%.
3. A 2" high curb at all edges, except for the opening on the mounting side.
4. A recommended level surface area of 60" x 60".
5. Site selection for mounting/dismounting activities could minimize or eliminate the need for a ramp.

IV. Amenities

A. Amenities, such as fixed benches, lockers, hitching posts and drinking fountains, should be accessible. *(Refer to Drinking Fountains, Chapter 16; Fixed Benches, Chapter 21; Reaches, Chapter 32; Storage Areas/Lockers, Chapter 41; etc.)*

Chapter 19

EXHIBITS

I. Concept

A. Exhibits shall be designed and installed for use by all visitors. Exhibit design should consider, but not be limited to, font style and size, color contrast between text and background, use of tactile exhibits, interactive exhibit controls, mounting height of exhibits and positioning of exhibits on the path of travel.

II. Exhibit Design

A. Provide exhibits that involve all the senses. *(Title II TAM-7.1000)*

B. Provide a captioned film, slide show or photographs of exhibits that cannot be made physically accessible. *(Title II TAM-7.1000)*

C. Characters and symbols shall contrast with their background, either light characters on a dark background or dark characters on a light background. *(ADAAG-4.30.5)*

D. The characters and background of signs shall be eggshell, matte or another non-glare finish. *(ADAAG-4.30.5)*

E. Consider the lighting conditions of exhibits. Reflective surfaces, glazed artwork and shiny objects should be coordinated with their lighting to allow them to be viewed or read without a glare. (*ADAAG-4.30.8)*

III. Hands-On Material

A. Objects to be picked up and/or handled, such as books, publications, artifacts, relief maps and tactile exhibits, should be placed at a minimum height of 15" and at a maximum height of 48" above the floor surface and within 24" for a forward reach. *(T24-1118B.5)*

B. Objects to be picked up and/or handled, such as books, publications, artifacts, relief maps and tactile exhibits, should be placed at a minimum of 9" and at a maximum height of 54" and within 10" for a side reach. *(T24-1118B.6)*

C. Provide models, either life-size or to scale, of rare or fragile objects that may not be touched. If the object is very large, a reproduction of a part of it should be available so that visitors can get an idea of its relative size. *(Title II TAM-7.1000)*

IV. Horizontally Mounted Displays

A. Horizontal exhibits to be touched or closely approached, such as relief maps and tactile exhibits, shall allow for a clear knee space that is a minimum of 12" deep, 36" wide and 28" clear height above the floor surface.

V. Display Print

A. Space between columns of exhibit text should be at least ? ". With smaller margins the text may appear to run together, causing visitors to read straight across. Margins around the text should be at least ½" wide. *(Title II TAM-7.1000)*

B. Text pertaining to pictures or artifacts should be placed directly below the pictures or objects. *(Title II TAM-7.1000)*

C. Legibility of vertically displayed written and graphic materials (signs) is dependent on the contrast, reflectivity, lighting, angle of vision and size. Cone of Vision is described under Optimal Vertical Field of Vision. The table below addresses only the minimum height (size) of letters and numbers. Height is that part of lower case letters that makes up the greatest portion of a letter. The table is based on a ratio of 5.55% between the height of letters and the horizontal eye-to-object distance. To enhance readability, signs need to have contrasting colors for text background (e.g. dark lettering printed on a light, matte background). Text that is screened or printed directly on Plexiglass cases is extremely difficult to read and should not be used. *(T24-1117B.5.5)*

Height of Print	Horizontal Distance Eye-to-Object
¼"	3' 9"
? "	5' 8"
½"	7' 6"
? "	9' 4"
¾"	11' 3"
1"	15' 0"
1½"	22' 6"
2"	30' 0"

VI. Optimal Vertical Field of Vision (See Drawing)

A. To allow both a standing and seated person to read vertically displayed material, the material should be mounted in accordance with the graph titled "Optimal Field of Vision for Sitting and Standing Adults."

B. The most comfortable cone, or field, of vision appropriate for signs, displays and exhibits covers an arc of approximately 45°, from 15° above the horizontal eye level to 30° below it. This applies to both the standing and seated person.

C. When standing, the adult eye level varies from 55" to 69" above the floor surface. The median height is 62". The adult eye level for a person using a standard wheelchair varies from 42" to 50". The median height is 46".

VII. Interactive Exhibits (See Drawing)

A. Exhibits containing audible information should be accompanied by an assisted listening system. Also, provide a transcript of the audio for individuals who are deaf or hard of hearing. *(Title II TAM-7.1000)*

B. Knobs, handles, dials, etc. used on interactive exhibits should be designed so they can be operated with a closed fist. *(T24-1117B.6.4)*

C. Keep magnifiers handy for visitors to examine photographs, signs, artifacts, fossils and mounted specimens in the exhibits. *(Title II TAM-7.1000)*

D. Locate interpretive staff nearby to answer questions or demonstrate interactive exhibits.

E. Interactive displays shall have a minimum of 60" x 60" clear floor space, or a “T” shaped space in front of the approach side. *(T24-1118B.3)*

F. Controls shall be located a minimum of 15" to a maximum of 48" above the floor surface. *(T24-1118B.5)*

G. The lower edge of a vertical visual display “window” shall be a maximum of 36" above the floor surface.

VIII. Braille Information

A. Exhibit text should be available in Braille and/or audio. Braille should be permanently attached in the upper left-hand area of the exhibits and displays. In some instances, this may not be an ideal location for Braille (e.g. if the upper left hand corner could not be reached by individuals in wheelchairs). In this case, it is important that all exhibits in the museum are consistent in the placement of Braille. Another option is to have a Braille handout or audio versions of exhibit text. *(Title II TAM-7.1000)*

IX. Protruding Objects

A. Objects projecting from walls (e.g. telephones, display cabinets, etc.) with their leading edges between 27" and 80" above the floor surface shall protrude a maximum of 4" into walks, halls, passageways or aisles. *(T24-1121B.1)*

B. Objects mounted with their leading edges at or below 27" above the floor surface may protrude any amount. *(T24-1121B.1)*

C. Freestanding objects mounted on posts or pylons may overhang 12" maximum from 27" to 80" above the floor surface. *(T24-1121B.1)*

D. Protruding objects shall not reduce the clear width of an accessible route or maneuvering space. *(T24-1133B.6.2)*

X. Aisles

A. A minimum width of 44" is required for aisles serving both sides and a minimum width of 36" if serving only one side. *(T24-1133B.6.2)*

XI. Clear Space

A. Exhibits and displays shall provide adequate allowance for approaching and viewing from a wheelchair. A stationary wheelchair requires a clear floor space of 30" x 48". *(T24-1118B.4.1)*

B. A wheelchair requires a minimum 60" diameter circle or a T-intersection with aisle width of 36" or wider to turn in any direction. All visitors viewing

an exhibit should be given the same opportunity to turn and leave the exhibit. *(T24-1118B.3)*

C. The clear horizontal circulation space at any exhibit or display shall be a minimum of 60" wide. *(T24-1118B.3)*

D. The surface must be firm and stable. *(T24-1124B.1)*

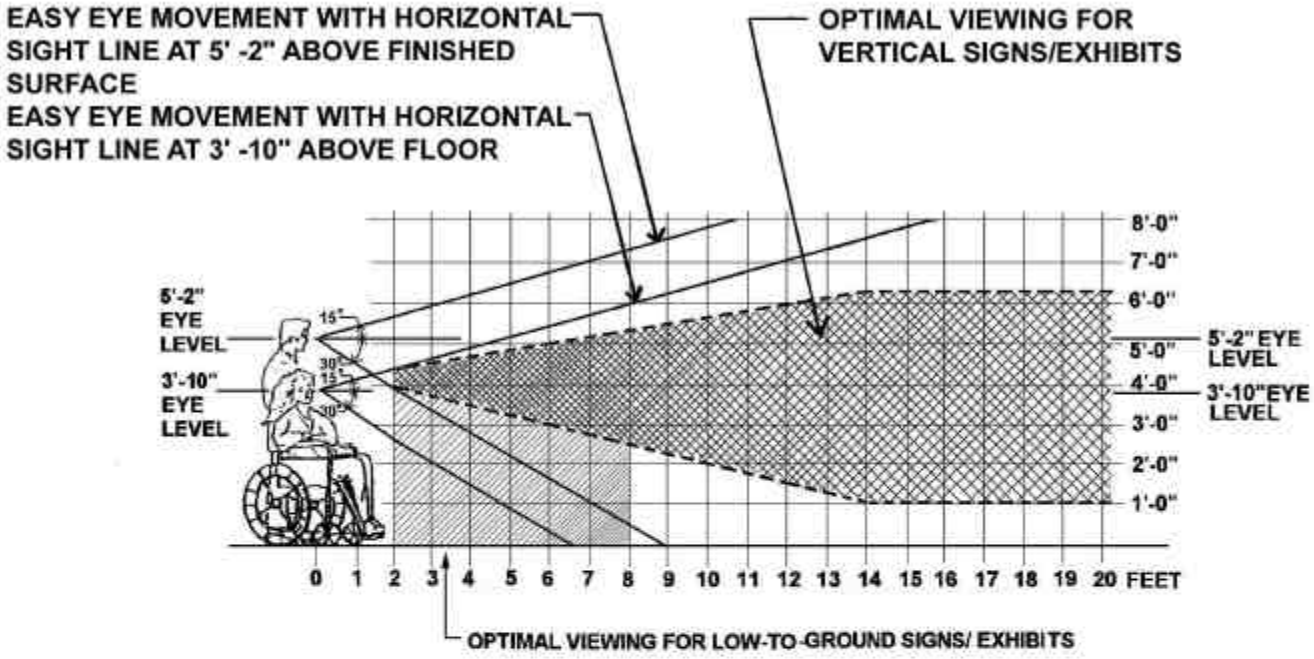

ADULT EYE LEVEL FROM WHEELCHAIR RANGES FROM 3'-6" TO 4'-2" ABOVE FLOOR.....MEDIAN = 3'-10"

ADULT EYE LEVEL WHEN STANDING RANGES FROM 4'-7" TO 5'-9" ABOVE FLOOR.....MEDIAN = 5'-2"

OPTIMAL FIELD OF VISION FOR SITTING AND STANDING ADULTS

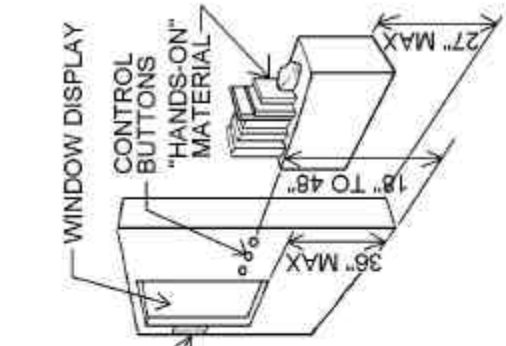

VERTICAL DISPLAY

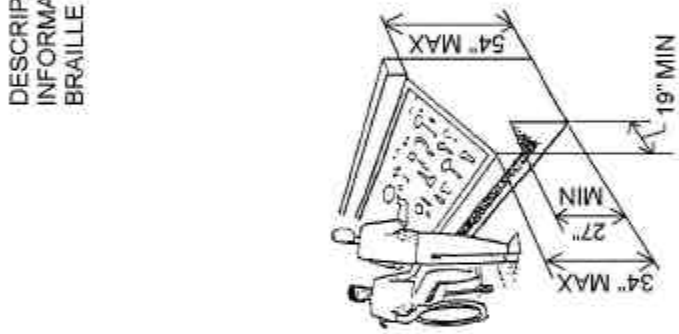

EXHIBIT APPROACH

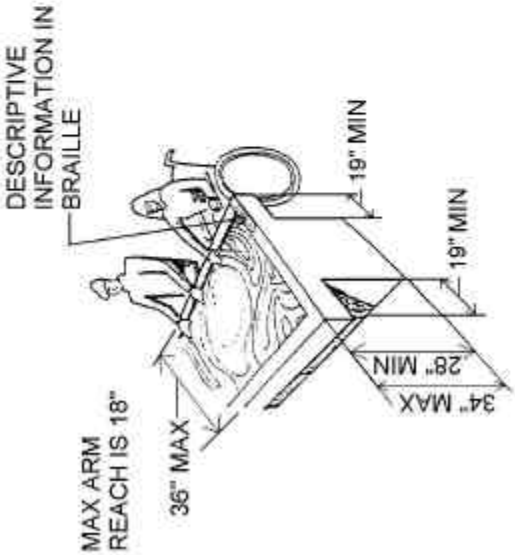

TACTILE EXHIBIT

Chapter 20

FISHING

I. Concept

A. Fishing may take place from any of 3 types of locations:
   1. Fixed or floating pier/dock.
   2. Bank or shoreline.
   3. Boat.

B. The primary issues in the design of accessible fishing sites are:
   1. Locating good fishing sites.
   2. Integrating the site with a continuous access network.
   3. Design for changing water level.
   4. Safety, including safe levels of lighting.

C. Accessible fishing sites should be fully integrated with a continuous access network offering appropriate support facilities.
   1. Accessible fishing sites shall be appropriately identified with the International Symbol of Accessibility (ISA) at the site and at paths and trails leading to the site (e.g. parking, restrooms, etc.). *(T24-1117B.5.1.1)*

D. Fishing sites may be developed or undeveloped.
   1. Developed sites are firm, level pads provided at the edges of streams, lakes or the seashore (for surf fishing).
   2. Undeveloped sites have not been significantly modified by construction, but are more analogous to rest areas in the pathway and trail system. They are firm, level areas at the water's edge and of sufficient dimension for wheelchair use.
   3. The fishing site surface must be firm and stable with a maximum slope of 3%, if highly developed, or 3.5% if moderately developed. *(99AG-3.2.1.B)*

II. Safety

A. All reasonable precautions should be taken to ensure a safe and comfortable fishing environment appropriate to the site.

B. Floor or grade surfaces of the site (platforms, piers, etc.) shall be made of non-slip materials. *(T24-1124B.1)*

C. Life rings, rescue poles and ladders should be provided for use in an emergency site adjacent to water where depth exceeds 24".

III. Piers/Docks

A. Fishing sites over water may be on fixed piers or floating docks.

B. Access to the fishing site shall be via an accessible path of travel.

C. The fishing site should extend over the water for a distance that allows fishing at both high and low water conditions.

D. Floating sites should have enough stability and flotation to support the additional weight of people and equipment without significantly affecting the equilibrium of occupants.

E. All gaps in horizontal walking surfaces shall have less than ½" clear width. *(T24-1124.B)*

IV. Connection to Shore

A. Shore connections between the dock and the land shall have a 36" minimum clear width. The maximum linear slope shall be 8.33% or flatter. *(99AG-15.3.1/ADAAG-4.3.3)*

1. Vertical joints in the surface of the facility (including the shore connection) shall have a maximum height of ¼" or, if ¼" to ½", changes must be beveled at 50%. *(T24-1124B.2)*

B. The surface material of the gangway or bridge should be slip-resistant. *(T24-1124B.1)*

V. Space Needed

A. There should be provision for a minimum of 5 linear feet per person along the water's edge. These dimensions intentionally exceed minimum wheelchair requirements. General spatial allowances are essential because privacy and solitude are very strong motivational factors for many anglers. *(94AG-3.2.1.B)*

B. Fishing site surfaces and railings should be of non-glare materials.

C. A minimum 30" x 48" clear space shall be provided at the accessible fishing site and the surface should be firm, stable and slip-resistant. *(99AG-15.3/ADAAG-4.2.4.1, 4.5.1)*

D. A maneuvering space of at least 60" in diameter or a T-intersection at least 36" wide must be provided. *(99AG-15.3.4/ADAAG-4.2.1)*

VI. Handrails

A. Wherever possible, it is recommended to provide a 4" wide gap at maximum 8' intervals in the handrail to allow the feel of the unobstructed line playing in the water. *(94AG)*

B. Where railings are provided, at least 25% of the overall railings shall be 32" maximum above the ground or deck surface. Railings shall be dispersed throughout the facility. *(99AG-15.3.2.2-3)*

C. Where railings, guardrails or handrails are provided, edge protection at a minimum of 2" high above the ground or deck surface shall be provided. *(99AG-15.3.2.1)*

D. Railings must support 250 lbs. of force in any direction. *(ADAAG-4.26.3 (1))*

E. Note: The requirement to lower the railing does not conflict with the OSHA requirements since most fishing piers or platforms are not considered work spaces. *(99AG-15.3.2.2)*

VII. Cleaning Tables/Wind Shelters

A. If fish cleaning tables are provided for standing persons, there shall be a proportionate section of table at 28" to 34" high, with clear knee space of 29" high, 19" deep and 30" wide underneath available for seated persons. *(ADAAG 4.32.3-4)*

B. If wind shelters are provided, they should be accessible.

C. Faucet controls must be operable with a closed fist, the activation force must be 5 lbs. or less and, if self-closing, must stay on at least 10 seconds. *(ADAAG-4.27.4/CPC-1508.1-2)*

VIII. Shade

A. Shade appropriate to the local climate and site conditions should be provided at the fishing sites or at an adjacent rest area on the path of travel.

B. The overhead casting clearance at fishing sites should be 12' minimum.

IX. Benches

A. If fixed benches are provided, refer to Fixed Benches, Chapter 21.

Chapter 21

FIXED BENCHES

I. Concept

A. Fixed benches, where provided, must be made accessible for users with various types of disabilities. *(99AG-16.12.2.1)*

B. At least 50% of the fixed benches being provided in a facility or a building shall be accessible and shall be dispersed among the types provided. *(99AG-16.12.2-2.2)*

C. Of the number of fixed benches required to be accessible, at least 40% shall be provided along an accessible route of travel. *(Refer to Routes of Travel, Chapter 34.)*

II. Clear Spaces

A. The surface around the accessible bench shall be firm and stable. *(99AG-16.12.6)*

B. A minimum area of 30" x 48" shall be provided at one end of the fixed bench so that a wheelchair user may be seated shoulder to shoulder with an individual seated on the bench. *(99AG-16.12.4/ADAAG-4.2.4)*

C. Clear spaces shall have a slope that does not exceed 2% in any direction (if necessary for proper drainage, 3% maximum is allowed). *(99AG-16.12.7)*

III. Bench Design

A. The fixed bench should be free of sharp edges or protruding hardware that may be hazardous.

B. The height of the front edge of the seating surface shall be between 17" and 19" above the adjacent grade or floor space. *(99AG-16.12.3)*

C. A back support shall be provided along the full length of the accessible bench. *(99AG-16.12.5).*

D. Accessible benches shall have seats that are 20" to 24" in depth and 42" minimum in length. The back support shall extend from a point 2" maximum above the bench to 18" minimum above the bench. *(RFP-4.37.2)*

E. 50% of the accessible fixed benches shall have at least one armrest that can withstand 250 lbs. of force in any direction. *(99AG-16.12.2-8/ADAAG-4.26.3).*

F. Where installed in wet locations, the surface of accessible benches shall be slip resistant and shall not accumulate water. *(RFP-4.37.5)*

Chapter 22

GUIDED / SELF-GUIDED PROGRAMS AND TOURS

I. Concept

A. Conducted tours and interpretive walks/talks should be scheduled at locations that are accessible.

B. Tours must be integrated to accommodate visitors with differing abilities, as possible. Guides and interpreters should respond to individual differences and adjust the pace accordingly.

C. Hikes or tours requiring the ability to traverse stairs or difficult terrain should be so described in advance publicity.

D. Sign language interpretation for the deaf should be available when requested in advance or whenever oral presentations are scheduled for large groups. *(28CFR-35.160(a)/TAM-7.1000)*

E. Material shall be provided which describes what information is available and the various means by which it is communicated.

II. Self-Guided Programs

A. Self-guided printed or audio tours must be designed to be accessible. Interpretive resource material to help guide the tour must be available in a variety of media (e.g. audiocassettes, large print, Braille, etc.). *(TAM-7.1000)*

III. Eye Level

A. Any solid barriers or walls required along the route or at interpretive trails must be designed so that their height and location will permit clear visual access for a person sitting in a wheelchair.

B. A person sitting in a wheelchair has an eye level of between 42" and 50" measured vertically from the floor surface. The drawings and graphs titled “Optimal Field of Vision for Sitting and Standing Adults” in Exhibits, Chapter 19, provides criteria for the placement of visual displays.

IV. Tour Route

A. Before beginning the tour, speakers should describe the route that will be taken, provide a map if available and give a brief overview of the resources that will be interpreted along the way. They should also discuss any obstacles that may be encountered along the route.

V. Speaking to Groups

A. Adequate lighting of speakers is essential to facilitate lip reading for persons with hearing impairments.

B. Speakers shall face the audience when speaking so that the lip reader, signer or oral interpreter may better see them.

C. Speakers should use a normal tone and volume during the program. They should not assume that speaking louder will help visitors with hearing impairments. Speak louder only when it is requested. For large groups, an amplification system/assistive listening system may be used.

D. Speakers should wait for the audience to settle and be sure to have everyone's attention before talking. Also, speakers may periodically check to see that everyone has understood before continuing.

E. Speakers should try to use short sentences and avoid using slang or jargon. A subject-verb-object sentence structure is best because it is the same syntax as American Sign Language.

F. Speakers should avoid sweeping arm movements or moving around while speaking; this may be distracting to some visitors.

VI. Delivering Interpretive Information

A. The program should be focused around a theme. Smooth transitions are helpful. Concepts and ideas should be discussed in basic terms and learning should be reinforced through repetition. Too much information may cause confusion.

B. When showing visitors an object and discussing it at the same time, speakers should allow extra time for visitors to see what has been described. Some visitors can look at an object during the talk, but visitors with hearing impairments may need to watch the sign language or oral interpreter, or they may be lip-reading.

C. Speakers should try to position themselves so that visitors can see them and the object of discussion at the same time. When working with a sign language or oral interpreter, the object should be placed between the two.

D. Speakers should point to objects that are being discussed to help visitors better understand the presentation.

E. Reading aloud exhibit or trail signage can assist visitors with visual impairments. *(28CFR-35.160(a)/TAM-7.1000)*

F. Photographs, slides, objects and other visual and tactile examples may be used to illustrate interpretive information.

G. Speakers should use descriptive language during the talk and encourage the entire group to be more aware of their senses.

H. Speakers should be familiar with and incorporate different methods of describing historical and natural settings and objects.

I. Speakers should explain new or difficult words and concepts. These words and their definitions may be included in a handout, along with suggestions for additional reading on the subject.

VII. Questions to the Audience

A. Questions should be repeated from the audience with sufficient time allowed for the audience to respond. An individual with a hearing impairment may understand the question a few seconds later because the sign language or oral interpreter may be a few words behind the speaker.

B. Speakers should look for visitors to indicate that they wish to answer a question before calling on them. A speech impairment or memory problem may interfere with visitors' abilities to answer questions. Calling on them when they are not ready may cause unnecessary embarrassment.

C. Speakers should not automatically dismiss a question or an answer as being irrelevant. Sometimes communication difficulties confuse what the individual is trying to say. Speakers should attempt to relate the question or answer to the subject.

VIII. Individual Needs

A. Extra time should be allowed between exhibits or points of interest. People using assistive mobility devices may require additional time to move about.

B. Some individuals with developmental disabilities may have difficulty understanding the concept of historical and calendar time. If this information is included in a program, a variety of techniques may be needed to explain or demonstrate it.

C. Speakers should be aware that the low light levels in some areas might create hazardous situations. Some individuals may need extra time when moving from a bright area into a darkened room to allow their eyes to adjust.

D. Speakers should meet with visitors with visual impairments before and/or after the program and ask if there is anything they would like described to them or if they would like additional information.

IX. "Hands-On" Materials

A. Life-size or scale models of significant objects that can't (or shouldn't) be touched may be provided to assist visitors with visual impairments.

X. References

A. For additional information, refer to "All Visitors Welcome," a California State Parks publication.

Chapter 23

HISTORIC SITES

I. Concept

A. The Americans with Disabilities Act requires government agencies to ensure that all of their facilities, services and programs are accessible.

B. All historical buildings and sites shall be as accessible as non-historical buildings to the greatest extent possible so that everyone may enjoy them.

C. The California Historical Building Code (CHBC), Part 8-6, provides alternative solutions for qualified historic buildings while allowing access for disabled persons. *(CHBC-601.2)*

D. Any changes from the highest levels of compliance must be decided on a case-by-case basis. Reasons for changes shall be documented and available in public records. *(CHBC-602.2)*

II. Process/Approvals

A. Accessibility issues for historic sites should be reviewed and approved by the Accessibility Section.

B. All State Park historic site construction projects should obtain input from their District Accessibility Resource Group (DARG).

C. If issues regarding the level of access for a historic structure cannot be resolved with assistance from the Service Center and the Accessibility Section, the Department's Historic Preservation Officer will provide final resolution.

D. All decisions must be documented.

III. Definitions

A. Qualified Historic Structures or Sites:
Structures or sites that are listed, or eligible to be listed, on the National Register of Historic Places or are designated historic by State or local law are known as Qualified Historic Sites. Other structures on other official State, county or local inventories and surveys may also have qualifying historic status. *(CHBC-218)*

B. Character Defining Features:
Physical or visual elements of a structure, such as shape, materials, craftsmanship, decorative features, interior spaces and setting, which give it architectural, historical and cultural value. *(CHBC-204)*

C. Historical Significance:
The importance for which a property has been evaluated and designated historic by an authority with jurisdiction. This includes structures or sites, generally at least 50 years old, that possess integrity of location, design, setting, materials and workmanship, and are associated with important

historic events or persons, have distinctive design or have potential to provide important information about pre-history or history. *(CHBC-209)*

IV. Accessibility Provisions *(CHBC Chapter 6)*

A. Basic Provisions:

The same access code requirements as those for non-historic buildings shall apply to historic structures unless compliance with regular code threatens historical significance or character-defining features. In other words, the accessibility requirements outlined in other ATPG chapters on buildings, doorways, elevators, lifts, ramps, restrooms, routes of travel, etc. should be applied before the options listed below. *(CHBC-602)*

B. Preferred Alternatives:

If using the Basic Provisions would threaten or destroy historic significance or character-defining features, the Preferred Alternatives may be used as long as they are applied on a case-by-case basis.

Alternatives are to be used in priority order as listed below, with the strictest used first. *(CHBC-603)*

1. Entry Access Route Alternatives
   a. Access shall be from any entrance used by the general public and no further than 200' from the primary entry.
   b. Access to any open and unlocked entry no further than 200' from the primary entry.
2. Door Alternatives (Basic Provisions require a 32" clear opening.)
   a. A single-leaf door with at least a 30" clear opening.
   b. A single-leaf door with a 29.5" clear opening.
   c. Double doors where one leaf provides a 29.5" clear opening.
   d. Double doors with a power-assist device and a combined clear opening of 29.5". Note: Offset hinges may sometimes be used to increase clear openings by as much as an inch and a half.
   e. Power-Assisted Doors: Power assisted doors may be considered acceptable alternatives for level landings, strike side clearances and door opening forces required by regular code.
3. Toilet Room Alternatives
   a. Where restrooms are provided, only one accessible restroom is required, and it may be unisex.
4. Exterior and Interior Ramp and Lift Alternatives
   a. A lift or ramp may have slopes up to 10% for distances up to 12".
   b. Access may be by ramps sloped up to 16.6% for no more than 13" with signs posting slopes at the top and bottom.

C. Equivalent Facilitation

If using the Preferred Alternatives threatens historical significance or character-defining features or would require a fundamental change in the

program, service or activity, then use of alternative designs or technology is permitted under the following conditions: *(CHBC-604)*

1. Alternatives must be applied on a case-by-case basis.
2. Alternatives used must provide substantially equivalent or greater accessibility to the facility.
3. Reasons for the use of Equivalent Facilitation and the effect such alternatives will have on the property must include comments from local groups of peoples with disabilities and must be documented and kept in State Park's permanent file.
4. Alternatives may include providing services, videos, virtual reality tours, maps, plans, exhibits or other creative solutions at accessible levels.

D. Exceptions:

If use of any alternative access standards as described would threaten or destroy historic significance or character-defining features and if no equivalent facilitation is feasible, on a case-by-case basis, an exception from requirements for full and equal access may be provided on the following conditions: *(CHBC-605)*

1. Interpretive exhibits or equal services of the excepted historic structure are provided in a location fully accessible to persons with disabilities.
2. The accessible location and services provided are equal to those provided in the excepted historic location.
3. Reasons for the use of alternative technologies and their effect on the significance and character-defining features of the historic structure must be documented.
4. Opinions and comments of state or local access compliance officials and people with disabilities must be part of the documentation, which shall be part of the permanent file of the enforcing agency.

Chapter 24

KITCHENS

I. Concept

A. Where kitchen facilities are provided, they must be accessible. The kitchen must be on an accessible route and all provided amenities used by the public must also be accessible to persons with disabilities.

II. Countertops

A. A minimum of 30" of countertop shall be provided for the sink counter. *(T24-1112A.2)*

B. An additional minimum of 30" of countertop shall be provided for the adjacent workspace. *(T24-1112A.2)*

C. The required accessible countertops shall be mounted no higher than 34" above the floor and shall be designed to enable repositioning to a minimum height of 28". *(ADAAG-9.2.2(7)/T24-1112A.2)*

D. There shall be a 30" x 48" clear space around sinks, appliances and countertops that allows a parallel approach. *(ADAAG-9.2.2(7)/T24-1112A)*

E. Knee space under the sink and work counter shall be a minimum of 19" deep, 27" high and 30" wide. *(T24-1122B.3)*

III. Cabinets

A. Base cabinets, including toeboard and shelving, directly under the sink and work surface counters shall be removable without the use of specialized tools or knowledge. *(T24-1112A.2-4)*

B. The flooring underneath removable cabinets shall be finished. *(T24-1112A.2)*

C. The sides and backs of cabinets located adjacent to the sink and workspace countertops shall be constructed of durable, non-absorbent materials to accommodate cabinet exposure to moisture and food handling when the countertop is lowered. *(T24-1112A.2)*

D. A minimum of 50% of cabinets, shelf space and refrigerator/freezer space shall be within reach ranges. *(Refer to Reaches, Chapter 32.) (ADAAG-9.2.2.7)*

E. Drawer and lower shelf space shall be provided at a maximum height of 48". *(T24-1112A.3)*

IV. Sinks

A. The bowl of the sink must be a maximum 6½" deep. *(ADAAG-4.24.4)*

B. Exposed hot water lines and drainpipes shall be out of the way or insulated. There shall be no sharp or abrasive surfaces under the sink. *(ADAAG-4.24.6/PC-1504.2.2)*

C. Faucet controls must be operable with a closed fist and require 5 lbs. or less pressure to activate. *(ADAAG-4.27.4/PC-1508-2)*

D. If self-closing faucets are provided, they must stay on at least 10 seconds. *(CPC-1508.1-2)*

Chapter 25

LIFTS

I. Concept

A. Where a lift is provided, it shall have the approval of CAL-OSHA if its rise is 12' or greater.

B. All platform lifts used in lieu of an elevator shall be capable of independent operation. *(T24-1105.3)*

C. Platform lifts may be used in lieu of an elevator or as part of an accessible route of travel, but is subject to approval by the authorizing agency having jurisdiction or the building official. *(T24-1105.3/T24-1116B.2)*

II. Lift Operation

A. The minimum landing area size shall be 60" x 60". Exception: a 30" x 48" landing with existing conditions may be permitted and is subject to review. A person using a wheelchair must be able to enter and operate the lift safely. *(T24-1116B)*

B. Operating controls must be the constant pressure type that will stop the lift if released, and must not require more than 5 lbs. of force to operate. *(T24-1117B.6.4)*

C. Elevator floor buttons or button gang plate shall be mounted at a maximum of 54" above the finish floor. A mounting height of 48" above the finish floor is preferred. *(T24-3003.4.7(a))*

III. Floor Finish

A. The lift floor surface must be firm, stable and slip-resistant, with all vertical changes in surfaces less than ¼" or, if ¼" to ½", beveled at 50%. *(T24-1124B.2)*

B. Floor covering shall have a non-slip, hard surface that permits easy movement of wheelchairs and, if carpet is used, it shall be securely attached, tightly woven, low pile and without padding. *(T24-3003.4.11)*

Chapter 26

PARKING

I. Concept

A. Where parking is provided, appropriate accessible spaces shall be provided. This will include the proper number, including van spaces, with appropriate signage and location of spaces with an accessible route of travel to the facilities or activities.

II. Location

A. Accessible spaces must be located as near as possible to a primary entrance or on the shortest accessible route from parking to the facility, activity, etc. *(T24-1129B.1)*

B. Parking spaces shall be located so visitors do not have to travel behind parked cars other than their own. *(T24-1129B.4.3)*

C. Accessible paths shall be provided from parking spaces to related facilities, including curb cuts or ramps, as needed. Ramps shall not encroach on any parking spaces. *(T24-1114.B.1.2)*

III. Spaces Required

A. Minimum number of accessible spaces required:
(VAS = Van Accessible Space) *(T24-1129B.1, see Table 11B-6))*

Total Spaces	Total Accessible Spaces	Total Spaces	Total Accessible Spaces
1-25	1 VAS	201-300	7 w/1 VAS
26-50	2 w/1 VAS	301-400	8 w/1 VAS
51-75	3 w/1 VAS	401-500	9 w/2 VAS
76-100	4 w/1 VAS	501-1000	2% of total w/3 VAS
101-150	5 w/1 VAS	1001+	20+1 for each 100 over 1000
151-200	6 w/1 VAS		

B. A minimum of one in every 8 accessible spaces, but no less than 1, should be served by a minimum 8' wide access aisle on the passenger side and be designated with a sign as “Van Accessible.” *(T24-1129B.4.2)*

IV. Tire Stops

A. A bumper or curb shall be provided to serve as a tire stop to prevent encroachment of cars on the required width of walkways. *(T24-1129B.4.3)*

V. Surface

A. Accessible parking spaces shall be located on a firm, hard packed or paved surface. *(T24-1124B.1)*

VI. Slope

A. Surface slopes of accessible parking spaces shall be kept to a minimum for surface water drainage and shall not exceed 2% in any direction. *(T24-1129B4.4)*

VII. Size

A. Each parking space must be 18' minimum in length. *(T24-1129B4.1)*

B. If only one space, it shall be 17' wide, outlined to provide 9' wide parking space and 8' wide loading and unloading aisle on the passenger side of the vehicle. *(T24-1129B4.2)*

C. If more than one space is provided, in lieu of providing a 17' wide space, 2 spaces can be provided within a 26' wide area, lined to provide a 9' wide parking space on each side of an 8' wide loading and unloading aisle in the center.

VIII. Identification

A. The surface of each accessible paved parking space shall have a surface identification, duplicating the International Symbol of Accessibility (ISA), in blue paint at least 36" square in area. *(T24-1129B.5.2)*

B. A permanently affixed reflectorized sign displaying the International Symbol of Accessibility (ISA) shall identify each designated space. *(T24-1129.B.5)*

1. The sign shall be no smaller than 70" square in area.
2. It shall be at a minimum height of 80" centered from parking/walking surface to bottom of the sign, if free standing and in a path of travel.
3. It shall be at a minimum height of 36" centered to the bottom of the sign from the landscape area or wall surface base, when not placed directly in a pedestrian circulation route.

C. An additional tow-away sign, with phone number, shall be posted at each entrance to the parking facility with the following: *(T24-1129B.5)*

1. The tow-away sign shall measure no less than 17" x 22", with 1" minimum lettering.
2. The sign shall read “Unauthorized vehicles parked in designated accessible spaces not displaying distinguishing placards or license plates issued for persons with a disability may be cited and towed away at owner’s expense.”

D. Accessible van spaces shall be identified with a “Van Accessible” sign located below the symbol of accessibility. *(T24-1129B.5)*

IX. Parking Structures

A. Parking structures shall have a minimum vertical clearance of 8'2" at entrances and where required for access to accessible parking spaces. *(T24-1130B)*

X. Pull-Through Parking

A. If pull-through parking for motorhomes, camping trailers or boat trailers is provided, it should meet the following guidelines:
   1. Width of parking area should be 10' and, if paved, the International Symbol of Accessibility (ISA) shall be painted at each end.
   2. An adjacent loading/unloading area (on the passenger side if a single parking spot) shall be 8' wide, blue striped if paved, with a post mounted accessibility sign on the outside edge of the loading/unloading area.

XI. Passenger Drop-Off and Loading Zones

A. If passenger drop-off and loading zones are provided, one zone shall have the following: *(T24-1131B.1-2)*
   1. An accessible aisle 5' x 20' provided adjacent and parallel to the vehicle pull-up space.
   2. Surface slope less than 2% in all directions including vehicle space. *(T24-1131B.2.1)*
   3. Stable, firm and slip resistant surfaces.
   4. Identified with the International Symbol of Accessibility (ISA).

B. Vertical clearance of 9'6" shall be located at the loading zone and the site entrance and exit. *(T24-1131B.2.2)*

C. Walk surfaces crossing or joining the vehicular way not separated by curbs, railings or other elements shall be identified with continuous, detectable warnings. These warnings shall meet the following guidelines:
   1. The warnings shall be between 24" and 36" wide.
   2. They shall contrast visually with adjoining surfaces with either dark on light or light on dark.

D. A curb ramp shall be provided for zones where a curb is present between the aisle and vehicular pull-up space. *(ADAAG-4.6.6)*

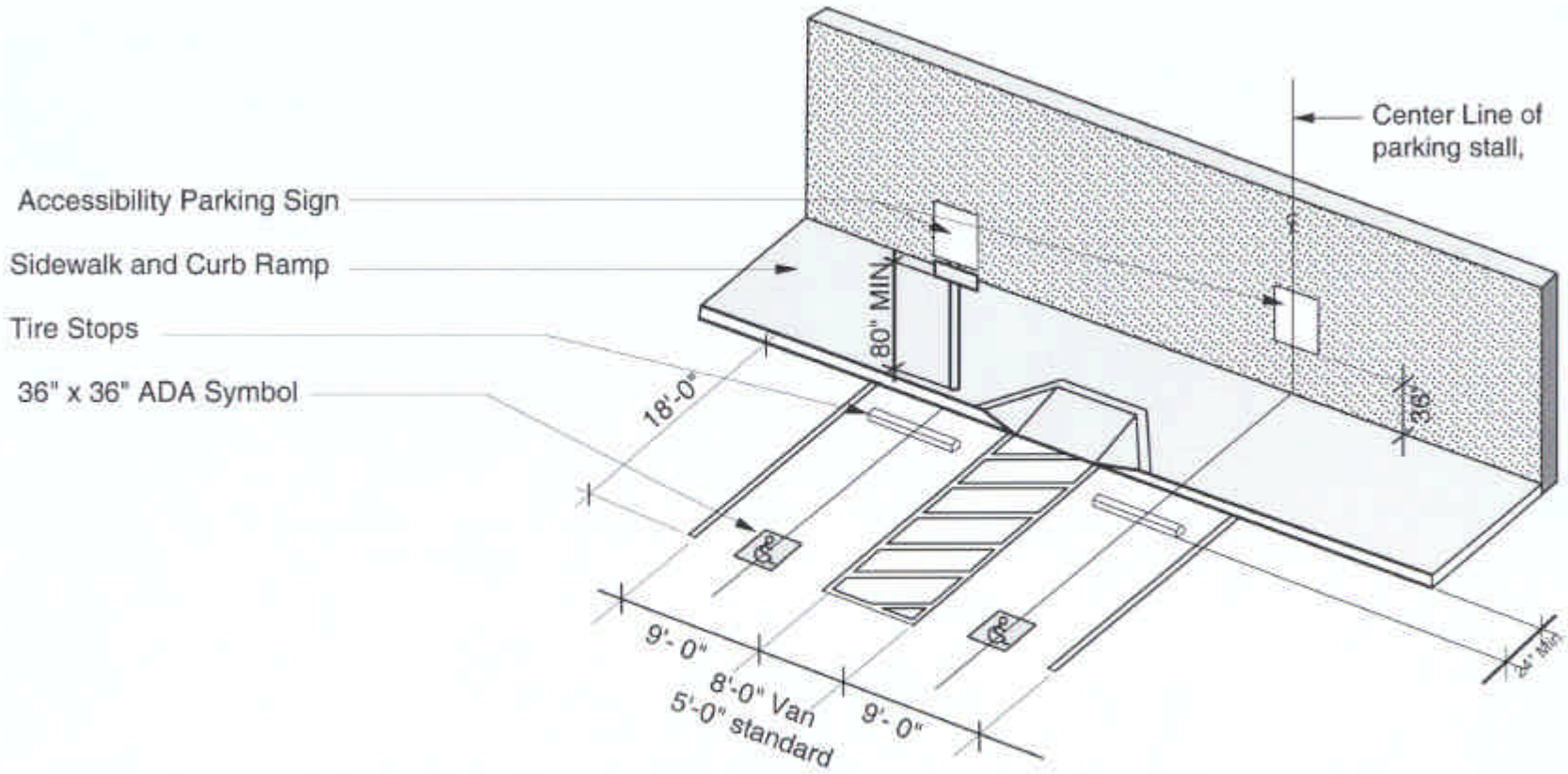

PARKING CONFIGURATON

Chapter 27

PICNIC SITES

I. Concept

A. A picnic site exists wherever one or more picnic tables is located. In general, picnic areas must include accessible parking, restroom, picnic site and routes that connect each of the elements throughout the area.

II. Site Planing

A. Where one fixed picnic table is provided in a picnic area, it must be accessible and must be connected to an outdoor recreation access route. *(99AG-16.5.1.1)*

B. If there are two or more picnic tables, at least 50%, but never less than two, shall be accessible tables. *(99AG-16.5.1.2)*

C. Of the accessible tables, at least 40%, but never less than two tables, shall be on an accessible route of travel. *(Refer to Routes of Travel, Chapter 34.)*

D. Accessible picnic tables shall be dispersed throughout the picnic area. *(99AG-16.5.2)*

E. The accessible picnic sites shall be located on a surface area with no greater than a 2% slope (3% slope when necessary for drainage). *(99AG-16.5.7)*

III. Picnic Tables (See Drawing)

A. Picnic tables and benches shall be on a firm, stable surface. *(99AG-16.5.6)*

B. An accessible picnic table shall have at least one wheelchair seating space. Where the table top perimeter exceeds 24 linear feet, the number of wheelchair seating spaces shall comply with the following: *(99AG-16.5.3)*

Table Top Perimeter	Wheelchair Spaces
25 lf – 44 lf	2 spaces
45 lf – 64 lf	3 spaces
65 lf – 84 lf	4 spaces
85 lf – 104 lf	5 spaces

C. Picnic tables and benches should have no sharp edges or protruding hardware that may be hazardous.

D. Around the picnic table, a 36" clear space measured from the seat shall be maintained. *(99AG-16.5.5)*

E. Distance from the tabletop to the ground shall be between 28" and 34". *(T24-1122B.4)*

F. Picnic tables shall have a minimum knee clearance of 27" high, 19" deep and 30" wide. Toe clearance shall be a minimum of 9" high and 24" deep. *(99AG-16.5.4)*

IV. Grills, Fire Rings and Cooking Surfaces

A. Where one cooking surface or fire ring is provided in an area, it must be accessible and connected to an outdoor recreation access route. *(99AG-16.6.1.1/99AG-16.7.1.1)*

B. Where two or more cooking surfaces, fire rings or pedestal grills are provided in an area, at least 50%, but never less than two, shall be accessible. The accessible cooking surfaces and fire rings shall be dispersed throughout the area. *(99AG-16.6.1-2/99AG-16.7.1-2)*

C. At least 40%, but never less than two, of the accessible cooking surfaces and fire rings shall be connected to an outdoor recreation access route. *(99AG-16.6.1.2/99AG-16.7.1.2)*

D. Surrounding the accessible cooking facilities and fire rings shall be a stable, firm surface having at least a 48" clear space *(99AG-16.6.3-7/99AG-16.7.5-7)*

E. The slope of the clear space around cooking facilities and fire rings shall be a maximum of 2% (3% slope when necessary for drainage). *(99AG-16.6.6/99AG-16.7.6)*

F. The height of the fire ring's raised edge shall be between 20" and 24".

G. On fire rings or fire place grills, the fire building surface height shall be 9" minimum above ground level and the distance from the outside edge of the fire ring to the fire building surface shall be a maximum of 24". *(99AG-16.6.4-5)*

H. All cooking surface heights shall be between 15" minimum and 34" maximum above the ground level. *(99AG-16.7.3)*

V. Water Faucets

A. Faucets shall be located adjacent to a clear, stable, firm ground surface area at least 60" x 60" in size. Faucets shall be configured to allow a forward approach. *(99AG-16.16.3)*

B. A 2% slope shall be allowed to drain toward the faucet drain (3% slope when necessary for drainage). Drain grating shall have a maximum opening of ½". *(99AG-16.16.4/T24-1124B.4)*

C. The faucet lever(s) shall be located 28" to 36" above the ground (does not apply to hand pumps) and shall be operated by a push button or lever actuator that requires no more than 5 lbs. of pressure. *(99AG-16.16.2-3/ADAAG-4.27.4)*

D. The faucet should be equipped with a top protrusion to hold bucket handles.

VI. Trash and Recycling Receptacles

A. The picnic area shall have a trash receptacle at the site or on an accessible route to the site. *(ADAAG-16.8.1)*

B. The trash and/or recycling receptacle shall be located on stable, firm ground with a clear space minimum of 30" x 48" and a slope of 2% (3% allowed if necessary for drainage). *(99AG-16.8.2-4)*

C. The trash and or recycling receptacle opening and/or operating mechanism shall be a maximum of 48" above the ground. *(ADAAG-4.27.3)*

D. Receptacle openings shall be operable with a single hand manipulation and require less than 5 lbs. of pressure to operate. This requirement does not apply to hinged lids and controls designed to exclude large animals. *(99AG-16.8.5/ADAAG-4.27.4)*

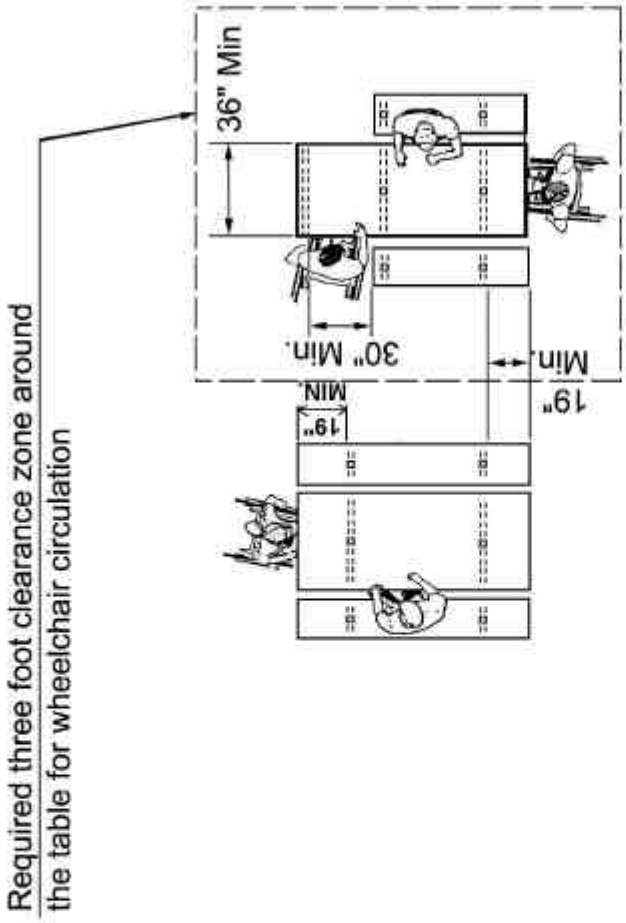

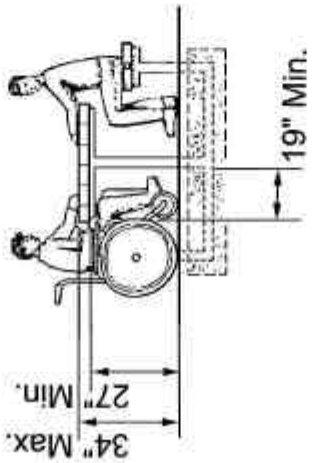

PICNIC TABLE

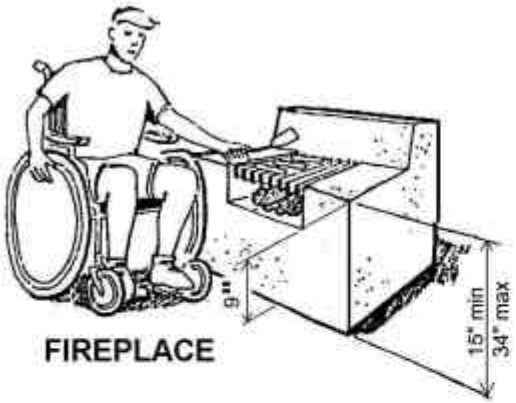

Notes: Side tables are not required but they are recommended on at least one side.

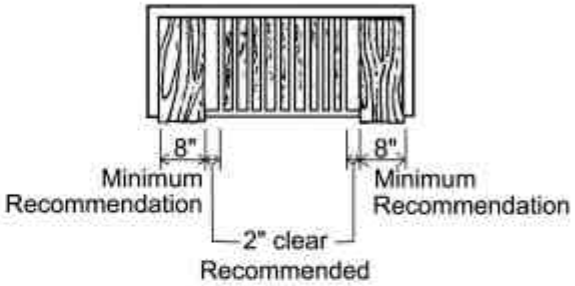

Provide a 4'-0" clear space on all sides around all fire ring and grill spaces for circulation.

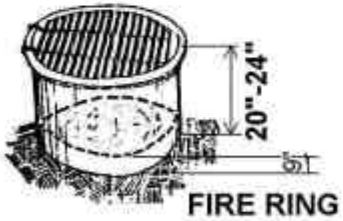

NOTE: FIRE SURFACE AT FIRE RING SHALL BE AT 9" ABOVE ADJACENT GRADE

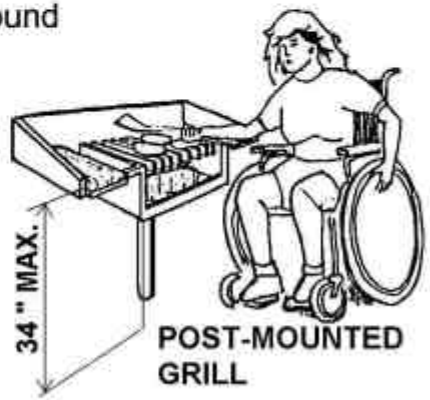

Fireplaces, Fire rings and Post Mounted BBQ Grills

Chapter 28

PORTABLE TOILETS

I. Concept

A. Portable toilets/restrooms should only be used as a temporary facility until an accessible restroom can be repaired/built or as a means to provide additional restroom availability for special events.

II. Guidelines

A. Whenever portable toilets are required, including portable toilets for special events and concessions, the minimum number of fully accessible toilets shall be 5% of the total available, but no less than 1. *(ADAAG-4.1.2.(6))*

B. If portable toilets are clustered in several locations, there should be 5%, but no less than one, accessible toilet at each cluster. If only one portable toilet is available at each location, it must be accessible. *(ADAAG-4.1.2.(6))*

C. Refer to Restrooms, Chapter 33 for applicable specifications.

Chapter 29

PUBLIC TELEPHONES

I. Concept

A. At least 50%, but no less than 1, of all permanently installed telephones for public use, including pay phones and public closed circuit telephones, shall be accessible. *(T24-1117B.2.1)*

B. Telephones shall be located on an accessible route of travel. (*Refer to Routes of Travel, Chapter 34.)*

II. Volume Control

A. All public telephones shall be equipped with a volume control adjustable from 12 dBA to 18 dBA. *(ADAAG-4.1.3(17)(b)/T24-1117B.2.8)*

B. Public telephones with volume control shall be hearing aid compatible and shall be identified by a sign containing a depiction of a telephone handset with radiating sound waves. *(ADAAG-4.31.5/T24-1117B.2.8)*

III. Operating Mechanisms

A. In addition to a volume control, accessible telephones shall have a cord length of at least 29" and shall have push-button controls where service for such equipment is available. *(T24-1117B.2.10-11)*

B. Telephone controls, including coin slots, shall be located between 9" and 54" above the floor for side approach and between 15" and 48" for forward approach. *(T24-1118B.5-6)*

IV. Clearances

A. There must be a clear level space that measures at least 30" x 48" at the front of the telephone. *(T24-1117B.2.2)*

V. Telephone Enclosures

A. If the telephone is in an alcove, there must be an additional maneuvering space of 24" deep by 30" wide or 15" deep by 48" wide provided. *(T24-1117B.2.4)*

B. If the telephone is in a full height enclosure, the minimum width must be 30". *(T24-1117B.2.7.2)*

C. If the telephone is a side reach phone in a partial enclosure, the overhang shall be no greater than 19" deep and the height of the lowest overhanging part shall be equal to or greater than 27". *(T24-1117B.2.7.1)*

D. If the telephone is a front reach phone and the overhang is greater than 12" the clear width of the enclosure must be 30" minimum. *(T24-1117B.2.7.3)*

E. If the telephone is a front reach phone in a partial enclosure and the clear width of the enclosure is less than 30", the height of the lowest

overhanging part must be equal to or greater than 27". *(T24-1117B.2.7.1-3)*

F. If the telephone is in an enclosure and if the leading edge of the enclosure is between 27" and 80" above the floor, it can only protrude a maximum of 4" into the accessible route. *(T24-1121B.1)*

VI. Reaches

A. The reach to the telephone over an obstruction must be 25" or less. *(T24-1118B.5)*

B. If the reach over an obstruction is less than 20", the maximum height of the telephone controls shall be 48". *(T24-1118B.5)*

C. If the reach over an obstruction is 20" to 25", the maximum height of the telephone controls shall be 44". *(T24-1118B.5)*

D. If obstructed, leg room shall be greater than or equal to the depth of the reach. *(T24-1118B.5)*

E. If a telephone directory is provided via a front approach, it must meet the reach requirements above, with or without obstruction. *(T24-1118B.5)*

F. If a telephone directory is provided via a side approach, it must be positioned between 9" and 54" above the ground surface and must not protrude more than 10" from the front surface of the telephone. *(T24-1118B.6)*

VII. Text Telephones

A. Additionally, at least one accessible text telephone shall be provided if there are a total of 4 or more phones in the building. *(T24-1117B.2.9.1-3)*

B. Text telephones shall be identified by the International TDD Symbol. Directional signage to the location of the text telephone shall be provided. *(T24-1117B.2.9.1-3)*

Chapter 30

PUBLICATIONS AND BROCHURES

I. Concept

A. All new or reprinted Department publications shall be prepared using the following parameters based on The Americans with Disabilities Act of 1990 (ADA). This policy applies to publications developed at the headquarters, district or unit level, including items produced by cooperating associations and concessionaires and park program materials. Publications include brochures, booklets, books, announcements, advertisements, park maps, campground maps, plans, technical reports and newsletters.

II. Public Information

A. Publications shall integrate information about accessible features with general descriptive information regarding park sites and facilities. A standard symbol of accessibility shall be used to locate accessible features on maps and to identify the location of accessibility information within the publication text.

B. Publications shall state the availability of a teletypewriter (TTY), if available. If a TTY is not available, the publications shall include the following statement, “To use the California Relay Service with TTY, call (888) 877-5378 or, without TTY, call (888) 877-5379.”

C. Publications shall incorporate the following standardized accessibility statement, “California State Parks does not discriminate against individuals with disabilities. Prior to arrival, visitors with disabilities who need assistance should contact (contact and phone number).”
This statement encourages visitors to request assistance, such as American Sign Language (ASL) interpretation for the deaf. There are other languages that are used, including Signed Exact English (SEE), Manual Coded English (MCE) or Pidgin Signed English (PSE). A visitor may prefer Real Time Captioning.

D. When applicable, publications shall state: “This publication is available in alternate formats by contacting (contact and phone number).”

E. Alternate formats include audio tape recordings, large print, Braille, electronic file and Internet.

III. Standard Type Font Size

A. Standard type font size for publications text is 12 point. Fonts should be easy to read and may be either Serif or Sans Serif, Sans Serif is generally recommended. This is an example of 12 point font (Arial).

IV. Large Print

A. Printed park visitor information shall be available upon request in large print format.

B. Large print materials shall be at least 18 point size in sans serif type font. "Sans serif" means without any short lines stemming from and at an angle to the upper and lower ends of the strokes of a letter. See examples below:

This is 18 point size.

This is Arial – an acceptable sans serif font.

This is Times New Roman – an unacceptable font for Large Print format.

V. Contrast

A. To enhance readability, dark print or graphics should be used on a light background. Reversed light print with a dark background may also be acceptable if there is high contrast.

VI. Symbols

A. International recreation symbols should be used on park maps whenever possible to identify areas, facilities or points of interest.

VII. Readability

A. Publications shall be easy to read. Concise sentences without slang or academic jargon should be used whenever possible.

VIII. Compliance Review

A. All new or redesigned publications of park visitor information, such as the California State Parks Official Map, the Reservations Brochure and individual park brochures, shall be reviewed by the Accessibility Section before printing. This review shall be scheduled to coincide with the appropriate stage of review during design of each publication. The Accessibility Section will review for content on accessible features, type and other items.

Please Note: Information in this chapter is from Department Operations Manual, Departmental Notice No. 2000-07.

Chapter 31

RAMPS

I. Concept

A. Ramps are only used on Exterior Routes of Travel (ERT). Ramps are not required on Outdoor Recreation Access Routes (ORAR) or trails. *(Refer to Routes, Chapter 34.)*

B. Not withstanding curb ramps, whenever the slope on an ERT exceeds 5%, a ramp must be provided. *(ADAAG-4.8.1/T24-1133B.5.1)*

II. Width

A. Pedestrian ramps serving primary entrances to buildings having an occupant load of 300 or more shall have a minimum clear width of 60". *(T24-1133B.5.2.2)*

B. All other ramps shall have a minimum width of 48". Exception: 36" minimum width is allowed for some Group Residential occupancies. *(T24-1133B.5.2.2)*

III. Slopes

A. The maximum linear slope on the ramp shall not exceed 8.3%. *(ADAAG-4.8.2/T24-1133B.5.3)*

B. The maximum cross slope on the ramp shall not exceed 2%. *(ADAAG-4.8.6/T24-1133B.5.3.1)*

C. Outdoor ramps and their approaches shall be designed so that water will not accumulate on walking surfaces. *(ADAAG-4.8.8)*

IV. Landings (See Drawing)

A. Ramps shall have level landings at top, bottom and each change of direction. Intermediate landings shall be provided at intervals not exceeding 30" of vertical rise. *(ADAAG-4.8.4/T24-1133B.5.4.1)*

B. Top landings shall not be less than 60" wide and shall have a length of at least 60" in the direction of the ramp run. *(ADAAG-4.8.4/T24-1133B.5.4.2)*

C. At the bottom and intermediate landings, the width shall be at least the same as the width of the ramp. *(T24-1133B.5.4.5)*

D. Intermediate landings at a change of direction in excess of 30° and bottom landings shall have a dimension in the direction of ramp run of no less than 72". Other intermediate landings shall have a dimension in the direction of ramp run of at least 60". *(ADAAG-4.8.4/T24-1133B.5.4.6-7)*

E. Landings that have a vertical drop greater than 4" shall have a curb at least 2" high or a wheel guide rail 2" to 4" high. *(T24-1133B5.4.9)*

F. Doors or gates in any position shall not reduce the minimum dimension of the landing to less than 42" and shall not reduce the required width by more than 3" when fully open. *(T24-1133B.5.4.3)*

G. The width of the landing shall extend 24" past the strike edge of any door or gate for exterior ramps and 18" past the strike edge for interior ramps. *(T24-1133B.5.4.4)*

V. Handrails (See Drawing)

A. Handrails are required on both sides of a ramp if the linear slope is greater than 5%, with the exception of exterior door landings where handrails are not required on ramps with less than 6" rise or 72" in length. *(ADAAG-4.8.5/T24-1133B.5.5.1)*

B. Handrails shall be continuous the full length of the ramp, shall be 34" to 38" above the ramp surface and parallel to it, shall extend a minimum of 12" beyond the top and bottom of the ramp and the ends shall be rounded or returned. *(ADAAG-4.8.5(2)/T24-1133B.5.5)*

C. The inside handrail on switchback or dogleg ramps shall always be continuous. *(ADAAG-4.8.5(1))*

D. Handrails projecting from a wall shall have a space of 1½" between the wall and the handrail. *(ADAAG-4.8.5(3)/T24-1133B.5.5.1)*

E. The grip surface shall be smooth, continuous, non-slip and have no sharp edges or corners. The diameter of the grip portion of the handrail shall be no less than 1¼" and no greater than 1½". *(T24-1133B.5.5.1)*

F. Handrails shall not rotate within their fittings. The edge of the handrail must have a minimum radius of ? ". *(ADAAG-4.8.5(7)/T24-1133B.5.5.1)*

G. The structural strength of the handrail must resist 250 lbs. per foot in any direction. *(ADAAG-4.26.3(1))*

VI. Edge Protection

A. Where the ramp surface is not bound by a wall or fence and the ramp has a drop-off, one of the following is required: *(ADAAG-4.8.7/T24-1133B.5.6.1-2)*

1. A 2" guide curb on both sides of the ramp.
2. A wheel-guide rail centered 2" to 4" above the ramp surface.

B. Ramps more than 30" above the adjacent ground shall be equipped with handrails and guardrails that are continuous from top to bottom. *(T24-1133B.5.7)*

VII. Surface

A. The surface of the ramp shall be stable, firm and slip resistant. *(ADAAG-4.5.1/T24-1124B.1)*

B. Surface changes in elevation shall be ¼" maximum. Surface elevation changes between ¼" and ½" shall be beveled at a 1:2 ratio. *(ADAAG 4.5.2/T24-1124B.2)*

C. Grate openings shall have spaces no greater than ½" wide and may be elongated, provided that long direction runs perpendicular to the primary direction of travel. *(ADAAG-4.5.4/T24-1124B.4)*

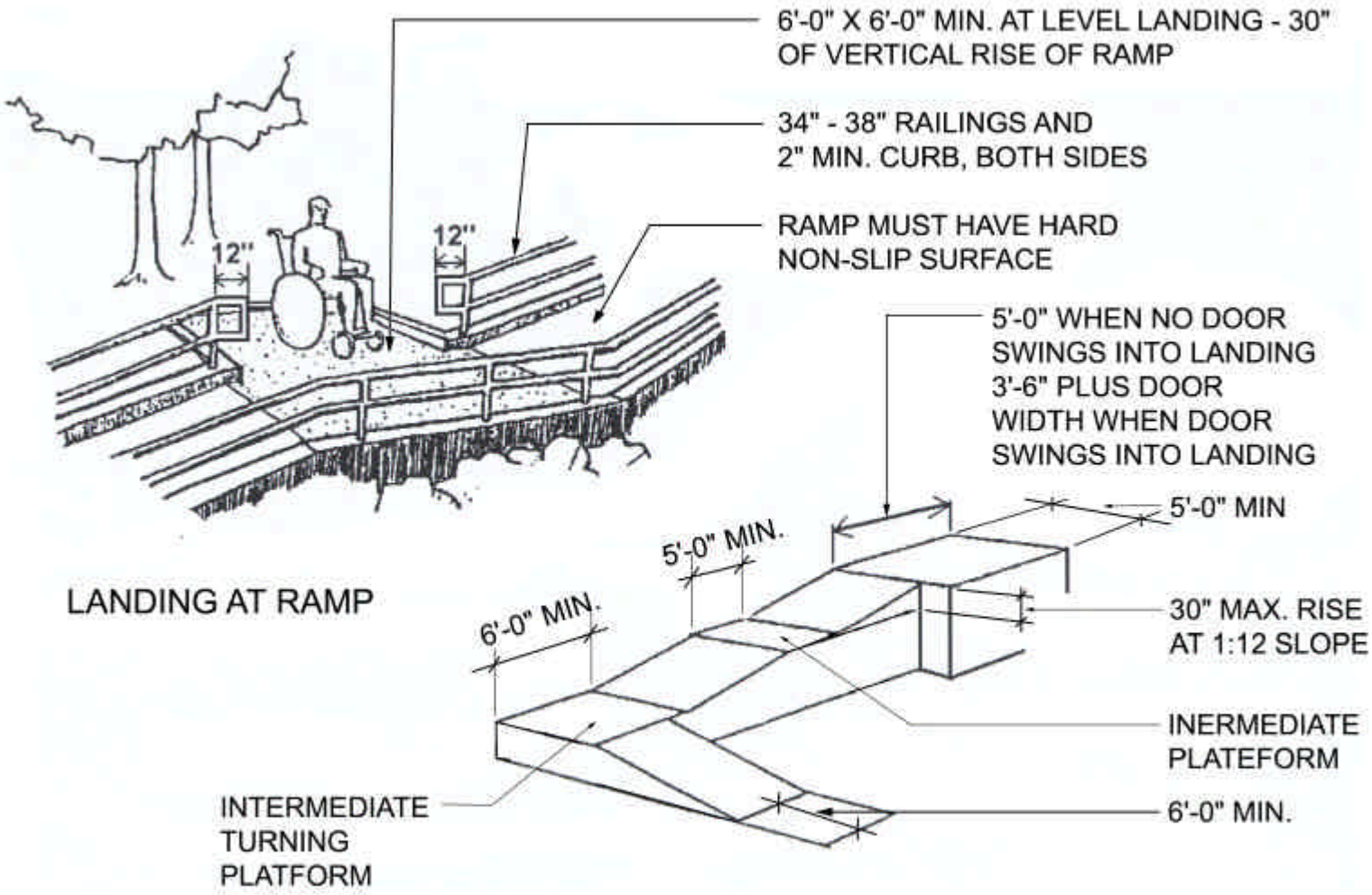

RAMP WITH TURNING PLATFORM

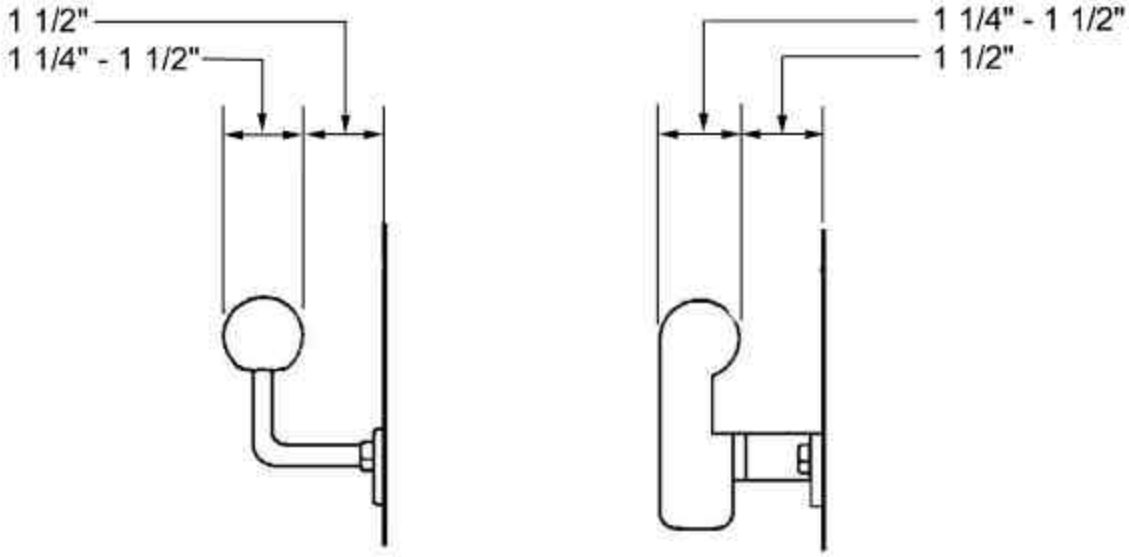

HANDRAILS

Chapter 32

REACHES

I. Concept

A. The minimum clear floor or ground space for wheelchairs may be positioned for forward or parallel approach to an object. Bases, enclosures and reach over an obstruction shall not impede either forward or parallel approaches by a person in a wheelchair

II. General

A. Clear floor space, at least 30"x 48", shall be created to allow either forward or parallel approach by a person in a wheelchair. *(T24-1118B.4.1)*

B. Clear floor or ground space for wheelchairs may be part of the knee space required under some items. *(ADAAG-4.2.4.1)*

III. Front Accessible Facilities

A. Front accessible forward approach with forward reach – item must be positioned between 15" and 48" from the floor with the maximum horizontal reach over an obstruction not to exceed 20". *(T24–1118B.5)*

B. A maximum reach over an obstruction of 25" is allowed if the maximum height of the item is 44*". (T24–1118B.5)*

IV. Side Reach

A. Parallel approach in a wheelchair with side reach – item must be positioned between 9" and 54" from the floor with the maximum horizontal reach over an obstruction not to exceed 10". *(T24–1118B.6)*

B. A maximum reach over an obstruction of 24" is allowed if the maximum height of the item does not exceed 46". *(T24–1118B.6)*

Chapter 33

RESTROOMS

I. Concept (See Drawing)

A. Access to restrooms shall comply with all subsections of Title 24 of the California Code of Regulations (CCR). The Code details and specifies all requirements relating to toilets, showers, lavatories, drinking fountains, fixtures and controls.

B. Restrooms shall be located on an accessible route of travel. (Refer to Routes of Travel, Chapter 34)

C. Exterior entry doors shall be accessible. (Refer to Doorways, Chapter 13).

II. Signage

A. All restroom entrance doors, both single user and multi-stall, shall have 2 signs:

1. Gender symbols:
   - a. Shall be at least ¼" thick and be mounted on the center of the door and 60" above the floor: *(T24-1115B.5)*
     - i. Women's: 12" diameter circle, ¼" thick.
     - ii. Men's: 12" equilateral triangle, ¼" thick, vertex facing up.
     - iii. Unisex: 12" triangle, ¼" thick, superimposed on a 12" circle.
   - b. Color shall contrast with the color of the door. Blue color symbols should only be used on accessible restrooms. *(T24-1115B.5)*
   - c. Gender pictographs may be included on the sign, but should be at least 6" high and have a color contrasting with the sign.
   - d. If not all restrooms are accessible, there must be a sign on the entry door using the International Symbol of Accessibility (ISA), to indicate the accessible restroom(s). *(ADAAG-4.1.2(7)(d))*
2. Text gender signs:
   - a. Shall be mounted on the latch side of the door 60" above the floor to the center of the text of the sign. *(T24-1117B.5.9)*
   - b. Shall be sans serif upper case text with characters ? " to 2" high and raised 1/32" minimum. *(T24-1117B.5.6.1)*
   - c. Should be approachable to within 3" without encountering protruding objects or swinging doors. *(T24-1117B.5.9)*
   - d. Gender shall also be indicated on the sign in Grade II Braille immediately below the text. *(T24-1117B.5.9)*
   - e. Text color shall contrast with sign background. *(T24-1117B.5.9)*

f. The accessible restroom(s) shall also include the blue and white International Symbol of Accessibility (ISA) as an integral part of the manufacturing of either the gender signs or the text gender sign, or as a separate sign at least 2" high placed immediately under either the gender sign or text gender sign. (*T24-1117B.5.1)*

III. Toilet Stall (See Drawing)

A. In multiple accommodation restrooms, the minimum number of fully accessible stalls shall be 20% of the total plus one.

B. If six or more stalls are provided, at least one shall be side transfer and at least one additional stall should be 36" wide with an outward swinging, self-closing door and have parallel grab bars. *(T24-1115B.7.1.5)*

C. The toilet stall shall have a clear, unobstructed opening width of 32" (34" if side opening instead of end opening). *(T24-1115B.7.1.4)*

D. The toilet stall shall be equipped with a self-closing door that can be opened and latched shut with a closed fist. *(T24-1115B.7.1.4)*

E. The stall door latch, mounted 30" to 44" above the floor, shall be flip-over, sliding or similar style not requiring grasping or twisting. *(T24-1115B.7.1.4)*

F. A water closet fixture shall have the following:

1. A minimum 28" wide clear space from fixture or minimum 32" wide space from wall at one side of water closet. *(ADAAG-4.17.3/T24-1115B.7.1.3)*
2. A minimum 48" long clear space in front of the water closet, if compartment has an end-opening door. A minimum of 60" shall be provided if the door is located at the side. *(ADAAG-4.17.3)*
3. The height of the top of the toilet seat should be between 17" and 19". *(CPC-1502/T24-1115B-1)*
4. If there is a common area outside the stalls, a clear space should be provided measuring a 60" circle or a space of 56" x 63" to a height of 27" from the floor. *(T24-1115B.7.1.1)*

G. The maximum pressure required to open the stall door must be 5 lbs. or less for interior doors, 8.5 lbs. or less for exterior doors. *(T24-1133B.2.5)*

H. If clothes hooks or shelves are provided, they must be within the following reach ranges: *(T24-1118B.5-6/T24-1125B.3)*

1. 9" – 54" for side reach.
2. 34" – 46" for side reach over an obstruction.
3. 15" – 48" for forward reach.
4. 20" – 44" for forward reach over an obstruction.

I. The strike edge clearance on the pull side of an interior stall door should be 18" for front approach, 24" for latch approach and 24" for hinge approach. *(ADAAG-4.17.5/4.13.6)*

J. All doors, except the door to the accessible stall, may not encroach more than 12" into the clear space. *(T24-1115B.7.1.1-2)*

K. There shall be a 44" (42" for latch approach) wide access to the accessible stall and a space in front of the accessible stall a minimum of 48" measured at a right angle to the closed door position. *(T24-1115B.7.1.4)*

L. In-swinging doors must leave the 30" x 48" clear space unobstructed. *(T24-1115B.7.2)*

IV. Grab Bars (See Drawing)

A. Grab bars located on each side, or on one side and back of toilet, shall be securely attached 33" above and parallel to the floor (up to 36" for tank type toilets). *(T24-1115B.8.1)*

B. Grab bars at the back shall be no less than 36" long. *(T24-1115B.8.1)*

C. The wall with the grab bars at the side shall be located 18" from the centerline of the water closet stool, and grab bars should be at least 42" long, with front end at 24" in front of the water closet stool. *(T24-1115B.7.1.3/T24-1115B.8.1)*

D. Grab bars shall not rotate in their fittings and shall support a 250 lbs. point load. *(T24-1115B.8.3.1-5)*

E. Diameter or width of the gripping surface shall be 1¼" to 1½" or the shape shall provide an equivalent gripping surface. *(T24-1115B.8.2)*

F. If grab bars are mounted adjacent to a wall, the space between the wall and grab bars shall be 1½". *(T24-1115B.8.2)*

G. Surface of grab bars shall be free of sharp edges or abrasive elements. *(T24-1115B.8.4)*

H. Minimum radius of all edges shall be ? ". *(T24-1115B.8.4)*

I. Grab bars shall encroach no more than 3" into clear space. *(T24-1115B.7.1.3)*

V. Controls

A. Controls for flush valve shall be mounted on the wide side of toilet areas 44" or less above the floor. *(ADAAG-4.16.5/CPC-1502)*

B. Controls are designed well if they can be operated with a closed fist. *(ADAAG-4.27.4/CPC-1502)*

C. Controls and operating mechanisms shall be operable with one hand and not require tight grasping, pinching or twisting of the wrist. *(ADAAG-4.27.4/CPC-1504.2.1)*

D. Force required to activate controls shall be no greater than 5 lbs. *(ADAAG-4.27.4/CPC-1502)*

E. Lever operated, push-type and electronically controlled mechanisms are acceptable examples. *(ADAAG-4.19.5)*

VI. Dispensers

A. Toilet paper dispensers shall be installed within 12" horizontally of the front of the toilet seat and a minimum of 19" above the floor. *(ADAAG-4.16.6/T24-1115B.9.3)*

B. Roll toilet paper dispensers that allow continuous flow of paper shall be used. *(ADAAG-4.16.6/T24-1115B.9.3)*

C. Paper dispensers cannot restrict use of grab bars.

D. Towel dispensers, air dryers, waste receptacles, etc. shall have 30" x 48" level clear space in front and shall be mounted with operable parts, including coin slots, no more than 40" above the floor. *(T24-1115B.9.2/T24-1118B.4.1)*

E. Dispensers shall operate with one hand and not require grasping, pinching or twisting of the wrist. *(ADAAG-4.27.4/T24-1117B.6.4)*

F. Shelves, if provided, shall be within the following reach ranges: *(T24-1118B.5-6/T24-1125.3)*

1. 9" – 54" for side reach.
2. 34" – 46" for side reach over an obstruction.
3. 15" – 48" for forward reach.
4. 20" – 44" for forward reach over an obstruction.

G. All levers, dispensers, dryers, etc. must be operable with a maximum pressure of 5 lbs. *(T24-1117B.6.4)*

VII. Urinals

A. Where provided, at least one shall have a clear floor space of 30" x 48" in front of the urinal space to allow forward approach. *(ADAAG-4.18.3/T24-1115B.9.4)*

B. Where provided, at least one shall have a rim projecting a minimum of 14" from the wall and a maximum of 17" above the floor. *(ADAAG-4.18.2/CPC-1503.2.1)*

C. Flush controls shall be operable with one hand without requiring grasping, pinching or twisting of the wrist. *(ADAAG-4.27.4/CPC-1503.2.2)*

D. Flush controls shall be mounted no more than 44" above the floor. *(ADAAG-4.18.4/CPC-1503.2.2)*

E. Force required to activate controls shall be no greater than 5 lbs. *(ADAAG-4.27.4/CPC-1503.2.2)*

VIII. Lavatories/Sinks

A. Minimum clear space of 30" x 48" shall be provided in front of the lavatory to allow forward approach. *(T24-1115B.9.1.1)*

B. Maximum rim height above the floor is 34". *(ADAAG-4.19.2/CPC-1504.2.1)*

C. Sinks shall be mounted with a clearance of at least 29" from the floor to the bottom of the apron. *(ADAAG-4.19.2/CPC-1504.2.1)*

D. Knee clearance is required under the front lip extending a minimum of 30" in width, with 8" minimum depth at the top. *(ADAAG-4.19.2/CPC-1504.2.1)*

E. Toe clearance shall be the same width and shall be a minimum of 9" high from the floor and a minimum of 17" deep from the front of the lavatory. *(ADAAG-4.19.2/CPC-15040.2.1)*

F. Hot waterlines and drainpipes under lavatories shall be insulated or otherwise covered. *(ADAAG-4.19.4/CPC-1504.2.2)*

G. No sharp or abrasive surfaces under the lavatories. *(ADAAG-4.19.4/CPC-1504.2.2)*

H. If the sink is adjacent to a wall, there must be a minimum 18" from the wall to the centerline of the sink. *(CPC-1504.2.1)*

I. Controls must be operable without grasping, pinching or twisting of the wrist (operable with a closed fist). *(CPC-1504.2.1/ADAAG-4.27.4)*

J. Controls must be activated with a force of 5 lbs. or less. *(ADAAG-4.27.4/CPC-1504)*

K. Faucets may be lever type or self-closing. Self-closing must close after 10 seconds or longer. *(ADAAG-4.19.5/CPC-1504.2.1)*

IX. Mirrors

A. Mirrors shall be mounted with the bottom edge no higher than 40" from the floor. *(T24-1115B.9.1.2)*

X. Light Switches

A. Light switches should be located within the following reach ranges: *(T24-1117B.6/T24-1118B.5-6)*

1. 9" – 54" for side reach.
2. 34" – 46" for side reach over an obstruction.
3. 15" – 48" for forward reach.
4. 20" – 44" for forward reach over an obstruction.

XI. Floors

A. The floor of the restroom must be firm, stable and slip resistant. *(T24-1124B.1)*

B. The maximum slope of the floor is 2% in any direction. *(T24-1115B.6.2.4.4)*

C. Changes in level shall be less than ¼" or, if ¼" to ½", they must be beveled at 50%. If over ½" they must be ramped. *(T24-1124B.2)*

D. Openings in gratings must be a maximum of ½" in one direction and, if elongated, must be perpendicular to the dominant direction of travel and flush with the floor. *(T24-1115B.6.2.4.4/T24-1124B.4)*

E. The floor must be smooth, hard, non-absorbent and extend up the walls a minimum of 5". *(T24-1115B.9.5)*

F. Walls within the toilet stalls and walls within 24" of the front and sides of urinals should be smooth, hard, non-absorbent and finished to 48" above the floor. *(T24-1115B.9.5)*

G. If carpeted, the carpet must be firmly attached, with a pile less than ½", level cut and all edges must be less than ¼". *(T24-1124B.3)*

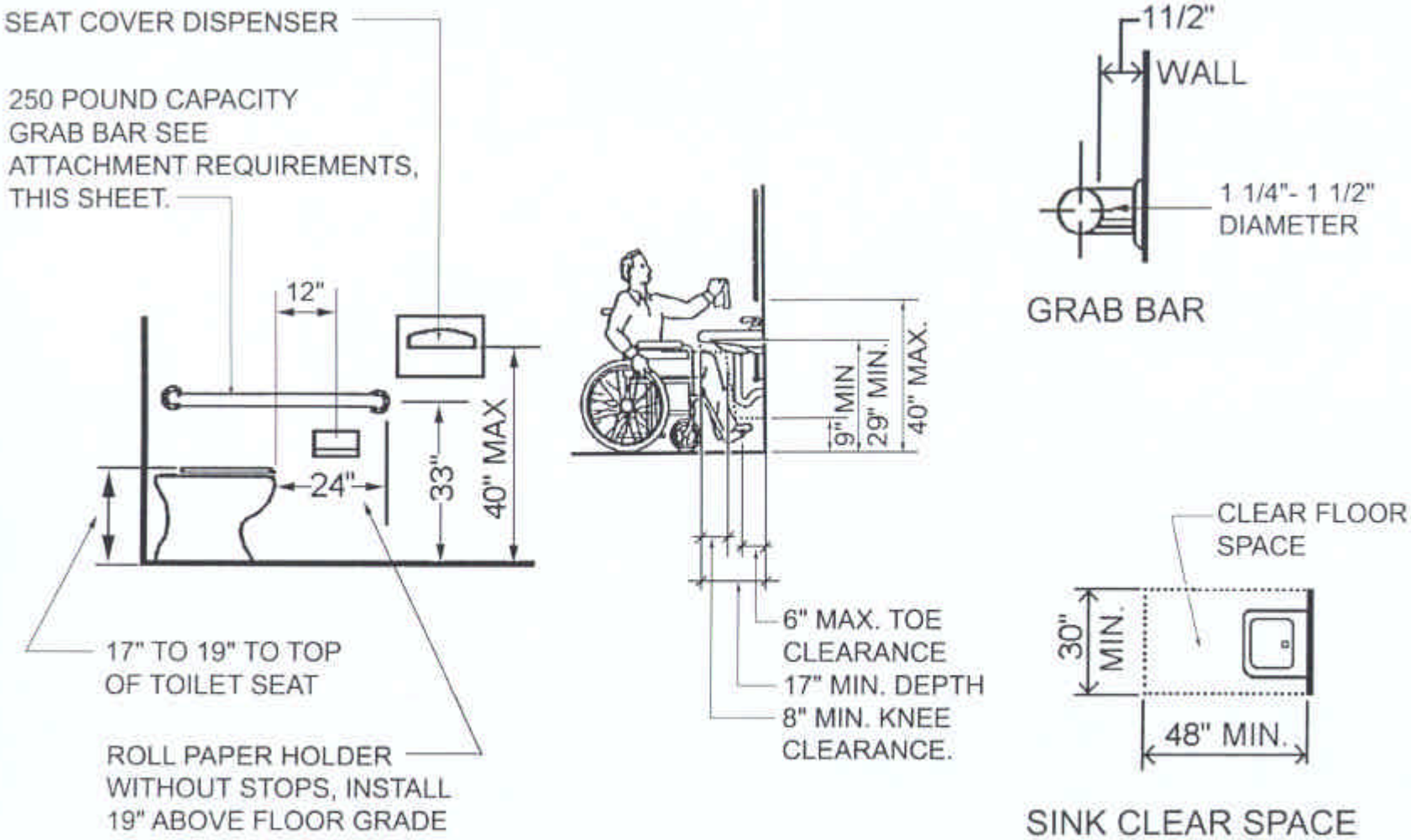

RESTROOM SPECIFIC MEASUREMENTS

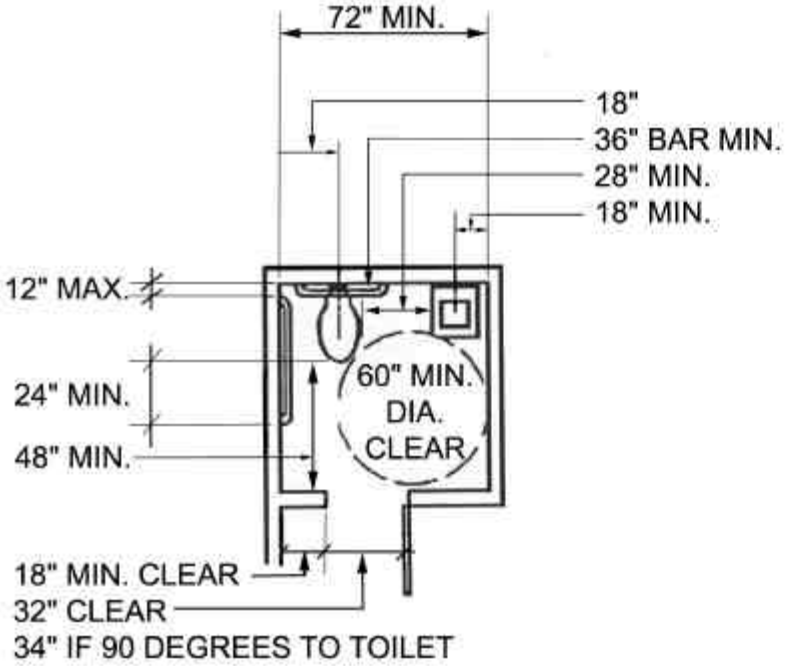

SINGLE STALL

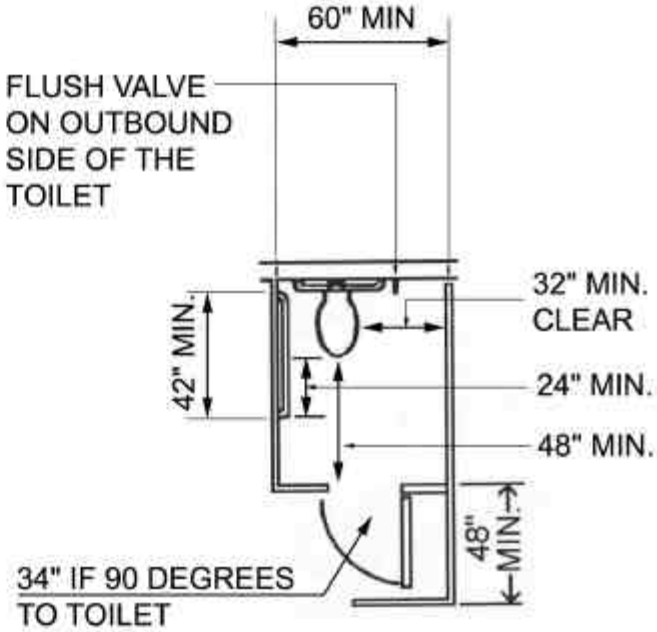

MULTIPLE STALLS

Restroom Toilet Stall

Chapter 34

ROUTES OF TRAVEL

I. Concept

A. Routes of travel represent the primary path that a pedestrian would typically use to access a building, facility or activity. In the park setting there are two different types of routes that may be used to connect the elements within a use area. Which type of route to use depends upon the level of development in the area and the elements that are being connected. Trails and Beach Access Routes are also used throughout parks, but they are not appropriate routes for use to connect elements within a specific use area. *(Refer to Trails, Chapter 43, or Beaches and Shores, Chapter 5, for technical requirements for trails or Beach Access Routes.)*

B. The most usable route for people with mobility impairments is the Exterior Route of Travel (ERT). The technical requirements for ERTs must be met in highly developed areas, such as paved parking lots to offices or visitor centers, museums and restrooms. Since they are the easiest to use, the grade requirements for ERTs should be met whenever possible in the park setting.

C. When the environmental setting or level of development precludes the use of ERTs, the technical requirements for Outdoor Recreation Access Routes (ORAR) must be used to connect elements in a use area. Typical applications of ORARs are from a campsite to the restroom or campfire center, within a picnic area or between the picnic site and activity area such as a trailhead or ball field.

II. Exterior Routes of Travel (ERT)

A. General

1. The accessible route shall be the most practical and direct route possible. It shall incorporate the guidelines of curb ramps, ramps, etc. when necessary. *(T24-1127B.1)*
2. A sign displaying the International Symbol of Accessibility (ISA) at the primary entrance and at every major junction of the accessible route shall be installed. The sign shall be displayed to direct the user to an accessible entrance. *(T24-1127B.3)*
3. The slope in the direction of travel shall be a maximum of 5%. Where conditions dictate a slope greater that 5%, a ramp shall be provided. *(Refer to Ramps, Chapter 31.) (ADAAG-4.3.7/T24-1133B.7.3)*
4. Walkways with continuous gradients shall have level areas 60" in length at intervals of 400'. *(T24-1133B.7.6)*
5. The slope perpendicular to the direction of travel, cross slope, shall be a maximum of 2%. *(ADAAG-4.3.7/T24-1133B.7.1.3)*

6. The surface must be firm, stable and slip resistant. Surface changes in elevation shall be ¼" maximum. Surface elevation changes between ¼" and ½" shall be beveled at 50%. Surface elevation changes greater than ½" must be ramped. *(ADAAG-4.3.8/T24-1124B.1-2)*
7. Route width shall be 48", except where undue hardship based upon right-of-way restriction, natural barriers or other existing conditions occur, in which case a minimum of 36" width is permitted. *(T24-1133B.7.1-3)*

B. Details

1. Grate openings shall have spaces no greater than ½" wide and may be elongated, provided that long direction runs perpendicular to the primary direction of travel. *(ADAAG-4.5.4/T24-1124B.4)*
2. Exterior doormats shall be anchored or recessed to prevent interference with wheelchair traffic. *(T24-1133B.1.1.1.3)*
3. Where wheelchair traffic is expected to make a U-turn around an obstacle, the route width must be a minimum of 42" on the approach and 48" around the obstacle. *(ADAAG-4.3.3)*
4. Where the route is less than 60" in width, a 60" x 60" passing space shall be provided at intervals of 200'. *(ADAAG-4.3.4)*
5. Objects that protrude into the accessible route with their leading edge between 27" and 80" from the ground, such as a telephone, shall not protrude more than 4". Objects mounted below 27" may protrude any amount but shall not reduce the clear width of the accessible route. *(ADAAG-4.4.1/T24-1121B.1)*
6. Vertical clearance on the accessible route shall be 80". If the vertical clearance of an area adjoining the accessible route is less than 80", a cane detectable barrier to warn the visually impaired shall be provided. *(ADAAG-4.4.2/T24-1121B.2)*
7. Except at walks adjacent to streets or driveways where changes in level are greater than 4" in vertical dimension occur, such as planters or fountains, a 6" high warning curb or a handrail with guide rails centered at 2" to 4" above the ground shall be installed. *(T24-1133B.8.1)*
8. Detectable ground surface or pavement warnings shall be provided where the access route crosses or adjoins a vehicular travel way, or a transit-boarding platform, that is not separated by a curb, guardrails or handrails. *(T24-1133B.8.3-5)*
9. Detectable warnings shall be durable, slip resistant, truncated domes in a staggered pattern that is 36" wide. The detectable warnings shall be high visibility yellow and differ from the adjacent surface in color and resiliency or sound upon contact with a cane. Additional requirements apply at passenger loading zones on transit boarding platforms. *(T24-1133B.8.3)*
10. A level area of at least 60" x 60" shall be provided on the pull side of any door or gate and shall extend 24" to the side of the strike

edge. A level area of 48" wide x 44" deep shall be located on the push side of any door or gate. *(ADAAG-4.13.6/T24-1133B.7.5)*

III. Outdoor Recreation Access Routes (ORAR)

A. General

1. Running slopes in the direction of travel shall be as follows: *(99AG-16.3.7.2.1-3)*
   a. 5% or less for any distance.
   b. From 5.1% to 8.3% for 50' maximum.
   c. From 8.34% to 10% for 30' maximum.
   d. Slopes greater than 10% are not permitted.
2. Resting spaces shall be 60" minimum in length, shall have a width at least as wide as the route and have a slope of 3% or less. Exception: the slope of the resting space can be as great as 5%, if required for proper drainage. The installation of resting spaces is required as follows: *(99AG-16.3.8)*

Percent slope	Maximum length	Rest interval
0% to 5.0%	No restriction	No restriction
5.1% to 8.33%	50'	Every 50'
8.34% to 10%	30'	Every 30'

3. The surface of the ORAR shall be stable and firm. *(99AG-16.3.1)*
4. The clear tread width shall be 36", except the width may be reduced to 32" for a distance of 24" maximum where existing conditions cannot be mitigated. *(99AG-16.3.2)*
5. The slope perpendicular to the direction of travel, cross slope, shall be 3% maximum. Exception: the cross slope can be as great as 5%, if necessary for proper drainage. *(99AG-16.3.7.1)*

B. Details

1. Openings in the surface, such as on a boardwalk, cannot be greater than ½" wide. Elongated openings shall be placed so that the long dimension is perpendicular or diagonal to the dominant direction of travel. Exception: openings are permitted to run parallel to the direction of travel so long as the opening is no wider than ¼". *(99AG-16.3.3)*
2. Objects that protrude into the route with their leading edge between 27" and 80" from the ground, such as a telephone, shall not protrude more than 4". Objects mounted below 27" may protrude any amount but shall not reduce the clear width of the accessible route. *(99AG-16.3.4)*
3. Vertical clearance shall be 80". If the vertical clearance of an area adjoining the accessible route is less than 80", a cane detectable barrier to warn the visually impaired shall be provided. *(99AG-16.3.4)*
4. Tread obstacles, such as roots or rocks, shall not be higher than 1". Exception: obstacles may be up to 2" high if they are beveled at

50% or if environmental conditions prohibit their removal. *(99AG-16.3.5)*

5. Where the width of the route is less than 60", passing spaces measuring 60" x 60" shall be provided at intervals of 200'. *(99AG-16.3.6)*
6. Where edge protection is provided, it shall have a height of 3" minimum. *(99AG-16.3.9)*

Chapter 35

SERVICE MACHINES

I. Concept

A. Where walk-up automated teller machines or vending machines are provided, at least one of each kind must be accessibly located and designed.

II. Controls

A. A clear floor space of 30" x 48" that allows a forward or a parallel approach by a person using a wheelchair shall be provided at controls, dispensers, receptacles and other operable equipment. The highest operable part of controls, dispensers, receptacles and other operable equipment shall be placed within 48" from the floor, if a front approach, and 54", if a side approach. *(T24-1117B.2.2/T24-1118B.5-6)*

B. Controls and operating mechanisms shall be operable with one hand and shall not require tight grasping, pinching or twisting of the wrist. *(T24-1117B.7.3/T24-1117B.6.4)*

C. The force required to activate controls shall not be greater than 5 lbs. *(T24-1117B.7.3/T24-1117B.6.4)*

D. Instructions, and all information for use, shall be made accessible to and independently usable by persons with vision impairments. *(T24-1117B.7.6)*

III. Location

A. Service machines shall be located on an accessible route of travel. (Refer to Buildings, Chapter 7; Routes of Travel, Chapter 34) *(ADAAG-5.8)*

B. One full, unobstructed side of the service machine or ATM must adjoin or overlap an accessible route or another clear space. *(T24-1118B.4.2)*

IV. Reach

A. In an unobstructed side reach, the control height shall be between 9" and 54". The reach depth shall be 10" or less. *(T24-1117B.7.4.1.3.1)*

B. In an unobstructed forward reach, the height of the controls shall be between 15" and 48". The reach depth shall be 10" or less. *(T24-1117B.6.3/T24-1118B.5)*

C. If the forward reach over an obstruction is no higher than 34" and is less than 20" deep, the maximum height of the controls should be 48". *(T24-1117B.6.3/T24-1118B.5)*

D. If the side reach over an obstruction is no higher than 34" and is 20" to 25" deep, the maximum height of the controls shall be 44". *(T24-1117B.6.3/T24-1118B.5)*

V. Display Screens

A. The display screen shall be positioned so that it is readily visible to and useable by a person sitting in a wheelchair with an approximate eye level of 45" in height. *(T24-1117B.7.5)*

B. A vertically mounted display screen tipped at a maximum of 30° away from the viewer shall not exceed 52" from the finish grade to the centerline of the screen. *(T24-1117B.7.5.1)*

C. A display screen mounted at an angle between 30° and 60° away from the viewer shall be located at a maximum of 44" above grade. *(T24-1117B.7.5.2)*

D. A screen mounted horizontally and tipped 60° to 90° away from the viewer should be 34" above grade. *(T24-1117B.5.3)*

Chapter 36

SIGNAGE

I. Categories

A. An effective information system is essential to the accessibility concept. The following three categories of signage are necessary: *(Title II TAM-7.1000)*

1. Location or directional information: All information that indicates direction or location, including signs along trails indicating direction and distances (e.g. 1.5 miles to waterfall).
2. Identification and description information: Identifies a specific facility, such as an information station or a restroom, describes the availability and location of facilities (e.g. a map, audible tape, Braille map, pamphlet or brochure). Trail signage should describe conditions such as average grade, cross slope, width of trail, trail surface and average size of obstacles.
3. Regulation and safety information: Information about rules, procedures and regulations (e.g. restrictive signs such as NO FISHING, NO CAMPING or NO SMOKING ON TRAIL; regulatory signs such as CAMP IN DESIGNATED AREAS ONLY and safety signs such as UNSAFE DRINKING WATER.

II. Signage

A. Signs should be part of a well-planned system throughout a park or recreational area.

B. Signs should be placed in logical and visually unobstructed locations, while ensuring that growth of adjacent foliage will not interfere with visibility.

C. The International Symbol of Accessibility (ISA) shall consist of a white figure on a blue background. The blue shall be equal to Color No. 15090 in Federal Standard 595B. *(T24-1117B.5.1.*2)

D. The International Symbol of Accessibility (ISA) sign shall be located at the primary entrance and at every major junction in an accessible route of travel. The sign shall be displayed to direct the user to an accessible entrance. *(T24-1127B.3)*

E. All signs must have a non-glare finish and characters that contrast with their backgrounds, either light characters on a dark background or dark characters on a light background. All signs shall have letters and numbers with the ratio of letter width to height from 3:5 to 1:1, and the stroke width to height from 1:5 to 1:10. *(T24-1117B.5.3-5)*

F. Signs identifying permanent uses of rooms and spaces shall have raised letters at a minimum 1/32", raised character symbols at a minimum ? ", sans serif, uppercase and Grade II Braille, mounted on the latch side of

any doors at 60" above the floor to the centerline of the sign. Signs must be approachable to within 3" without obstruction. *(T24-1117B.5.6-9)*

G. All permanent information or directional signs, when suspended or projected 80" or more above the ground along the path of travel, must have upper case letters at least 3" high. *(T24-1117B.5.4/T24-1121B.2)*

H. Pictograms must be accompanied by the equivalent verbal description placed below in raised letters and Grade II Braille when used in a permanently signed room or space. *(T24-1117B.5.6.3)*

I. Pictograms should have 6" borders. The International Symbol of Accessibility (ISA) circles and triangles on restroom doors are not considered pictograms. *(T24-1117B.5.6.3)*

J. Buildings that have been remodeled to provide accessible restrooms and/or elevators shall post this information in the building lobby. *(T24-1117B.5.8)*

Chapter 37

SINKS

I. Concept

A. This chapter contains the accessibility requirements for sinks, other than lavatories or those found in restrooms. These types of sinks include kitchen sinks, sinks in picnic and campground areas and utility sinks. For full requirements for lavatories, please refer to Restrooms, Chapter 33.

II. Clearances

A. The rim of the sink should be 34" or less above the floor. *(ADAAG-4.24.2)*

B. Except for utility sinks, there must be a clearance of at least 27" from the floor to the bottom of the sink apron, with a knee clearance under the front lip extending a minimum 30" in width, with a 19" minimum depth underneath the sink. *(ADAAG-4.24.3)*

C. Except for utility sinks, there must be a 30" x 48" clear floor space provided in front of the sink to allow for a forward approach. *(ADAAG-4.24.5)*

D. The clear floor space must be on an accessible route and must extend a maximum of 19" underneath the sink. *(ADAAG-4.24.5)*

III. Details

A. Except for utility sinks, the bowl of the sink must be a maximum 6½" deep. *(ADAAG-4.24.4)*

B. Exposed hot water lines and drainpipes shall be out of the way or insulated. There shall be no sharp or abrasive surfaces under the sink. *(ADAAG-4.24.6/CPC-1504.2.2)*

C. Faucet controls must be operable with 5 lbs. or less pressure and with a closed fist. *(ADAAG-4.27.4/CPC-1508.1-2)*

D. If self-closing faucets are provided, they must stay on at least 10 seconds. *(CPC-1508.1-2)*

E. Provide a minimum linear length of 30" accessible counter top for kitchen sinks. *(T24-1112A.2)*

IV. Utility Sinks

A. A clear floor space of 30" x 48" has to be provided in front of the sink to allow for a parallel approach (with a side reach). *(99AG-16.13.2)*

B. The clear space in front of the sink shall have a slope no greater than 2% (3% if necessary for proper drainage). *(99AG-16.13.3)*

C. The bottom of the bowl must be a minimum 15" above the floor. *(99AG-16.13.6)*

D. Counter or rim of the sink must be 34" or less above the floor. *(99AG-16.13.5)*

E. The surface of the clear space must be stable and firm. *(99AG-16.13.4)*

F. Controls must be operable with one hand and not require tight grasping, pinching or twisting of the wrist (within 5 pounds). *(99AG-16.13.7/ADAAG-4.27.4)*

G. If utility sinks are provided, at least 5%, but no less than 1, must be accessible. *(99AG-16.13.1)*

Chapter 38

SITE PLANNING

I. Concept

A. Site planning is important to the process of providing access to all programs and services. Each site shall be planned as a whole to form a well-integrated, accessible network of facilities and programs. If a park provides major programs in different areas, connected access should be provided in each of these unique areas, rather than selecting one area and restricting visitors with disabilities to use only that area.

B. If camping or picnic areas provide some sites in the sun and some in the shade or some overlooking a lake, accessible sites should be developed in each location, rather than a limited selection. Partial accessibility does not provide for optimum experiences through individual choice.

II. Access Networks

A. No program or facility can function independently of its linkage to the natural, social and physical fabric to which it belongs. Similarly, no program or facility can be accessible by itself. These linkages constitute an access network (the connections between facilities and activities) within a park.

B. An access network consists of two major components:

1. A series of accessible, interdependent, related facilities, programs and activities (e.g. parking, restrooms, visitor center, shops and campsites).
2. The continuous path of travel that connects these related facilities, programs and activities.

C. All component features of an access network shall, by definition, be accessible. A park or recreation area may contain more than one access network.

D. Using an accessible path of travel, a visitor with a disability should be able to enter the park, get to and utilize restrooms and facilities, and take part in the programs available (visitor center, picnic area, campgrounds, etc.).

Chapter 39

SPECIAL EVENTS

I. Concept

A. For accessibility purposes, these guidelines generally refer to events open to the public, not to private events for specific invited groups only. At private events, it is the park's responsibility to provide accessible parking, building entry, restrooms and other supporting facilities, where possible. If requested, special accommodation may be needed.

B. Special events often require park staff to allow the public into areas that normally receive little use or that may not be equipped for large groups. Prior to the special event, these areas should be evaluated for accessibility.

C. All event facilities should generally be accessible. An outline is provided below.

D. Private vendors should be reminded of their responsibilities to provide accessible exhibits, aisles, sales counters, etc.

II. Outline of Accessibility Guidelines

A. Event Publications *(Refer to Publications and Brochures, Chapter 30.)*

1. All advance publications should list a phone number for those in need of special accommodation.
2. All proposed park handouts, brochures, maps, etc. should be reviewed for legibility by the Accessibility Section at least two weeks before the scheduled printing date.
3. Alternative format versions should be available or able to be provided if requested (large print, transcripts, diskettes, etc.).

B. Parking *(Refer to Parking, Chapter 26.)*

1. Accessible parking, including temporary event parking, shall be provided at legally defined ratios of accessible and van accessible spaces per total spaces provided. *(T24-1129B.1)*
2. Proper slopes, surfaces, routes of travel and signage with the International Symbol of Accessibility (ISA) must be provided for accessible parking.

C. Restrooms *(Refer to Portable Toilets, Chapter 28, and Restrooms, Chapter 33.)*

1. 5% plus 1 of any added portable restrooms shall be accessible. *(ADAAG-4.1.2(6))*
2. Routes to and from restrooms shall be accessible. *(T24-1141B.1.2)*

D. Assembly Areas *(Refer to Campfire Centers/Assembly Areas, Chapter 8.)*

1. If requested in advance, an American Sign Language (ASL) interpreter must be hired to be present during presentations.

2. In general, if oral presentations are a significant part of the program, an ASL interpreter is recommended.
3. Assembly areas must have appropriate ratios of total seats to wheelchair spaces with companion seating. Wheelchair spaces should measure at least 30" x 60". *(ADAAG-4.1.3(19)(a)/T24-1104B.3.4.1)*
4. If there are more than 300 seats total, wheelchair spaces should be dispersed in several locations, including shaded locations. *(ADAAG-4.3/T24-1104B.1.4.2)*
5. Stages and routes to them shall be accessible. *(T24-1104B.3.10-11)*

E. Exhibits/Visitor Information *(Refer to Exhibits, Chapter 19, and Visitor Information/Sales Areas, Chapter 44.)*
1. Park event exhibits must be accessibly designed and located.
2. Sales counters and reach ranges shall be accessible.

F. Drinking Fountains *(Refer to Drinking Fountains, Chapter 16)*
1. If more than one additional drinking fountain is provided, at least 50% of added fountains shall be accessibly designed and located. *(ADAAG-4.1.3(10))*

Chapter 40

STAIRS

I. Concept

A. Where stairs are provided, in addition to required elevators, lifts or ramps, they shall be on the building/facility route of travel and shall meet the following guidelines.

II. Treads and Risers

A. The heights and widths of the treads and risers shall be uniform. Stair treads shall be no less than 11" wide measured from riser to riser. *(T24-1133B.4.5.3)*

B. Stair treads must be self-draining and of a slip-resistant material. *(ADAAG-4.9.6/T24-1133B.4.5.1)*

C. Open risers are not allowed. *(T24-1133B.4.5.3)*

D. Nosings must be projected, but not more than 1½" past the face of the riser below. Nosings shall be rounded at a maximum radius of ½". *(ADAAG-4.9.3/T24-1133B.4.5.2)*

E. There shall be at least 2" of contrasting color on the nosing of every tread for exterior stairs. Interior stairs shall have contrasting color on the top-most and bottom-most nosing. *(T24-1133B.4.4)*

F. The strip shall be parallel to and not more than 1" from the nose of the step or landing to alert the visually impaired. *(T24-1133B.4.4)*

G. The striping material shall be slip resistant. *(T24-1133B.4.4)*

H. The California Building Code Section 10033.3.3 shall govern the width of stair used for a primary exit way.

III. Handrails (See Drawings)

A. Handrails shall be provided on both sides of stairs and extend parallel to the floor 12" beyond the upper riser and 12" plus one tread width beyond the lower riser. *(ADAAG-4.9.4(2)/T24-1133.B4.2.2)*

B. All ends shall be returned (no abrupt ends). *(ADAAG-4.9.4(6)/T24-1133B.4.2.3)*

C. Stairs wider than 88" shall have an intermediate railing at a maximum interval of 88". *(T24-1003.3.3.6.1)*

D. Handrails shall be 34" to 38" above the nosing of the treads. *(T24-1133B.4.2.1)*

E. Railings shall be securely mounted, not rotate in their fittings, and be mounted to leave a space of exactly 1½" between the wall and the inside edge of the railing. *(T24-1133B.4.2.5)*

F. Railings shall have a diameter or width between 1¼" and 1½". *(T24-1133B.4.2.6.1)*

G. If railings are recessed into an adjacent surface, the recess must be at least 18" higher than the top of the railing and a maximum of 3" deep. *(T24-1133.4.2.5)*

H. Railings shall have a smooth surface with no sharp corners. Edges shall have a minimum radius of ? ". *(T24-1133.4.2.6.1)*

I. Gripping surfaces shall be uninterrupted by newel posts, other construction elements or obstructions. *(T24-1133B.4.2.6.1)*

J. On stairs that switch back at intermediate landings, the interior railings shall be continuous around the turn and not extend out into the intermediate landing. *(T24-1133.4.2.4)*

K. Handrails shall support 250 lbs. of pressure in all directions. *(ADAAG-4.26.3.2-4)*

IV. Stairway Identification

A. In buildings two or more floors in height with enclosed stairways, a sign shall be located at each floor indicating the floor level. *(T24-1133B.4.3)*

B. The sign shall be located 60" above the floor in a readily available, visible location. Sign information shall be presented in raised Arabic numerals and Grade II Braille. *(T24-1133B.4.3)*

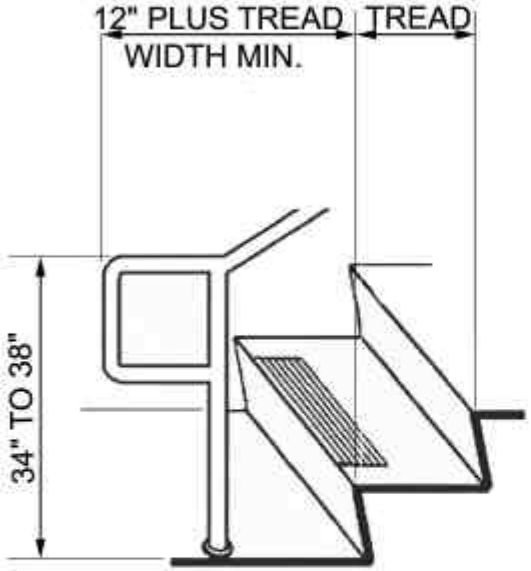

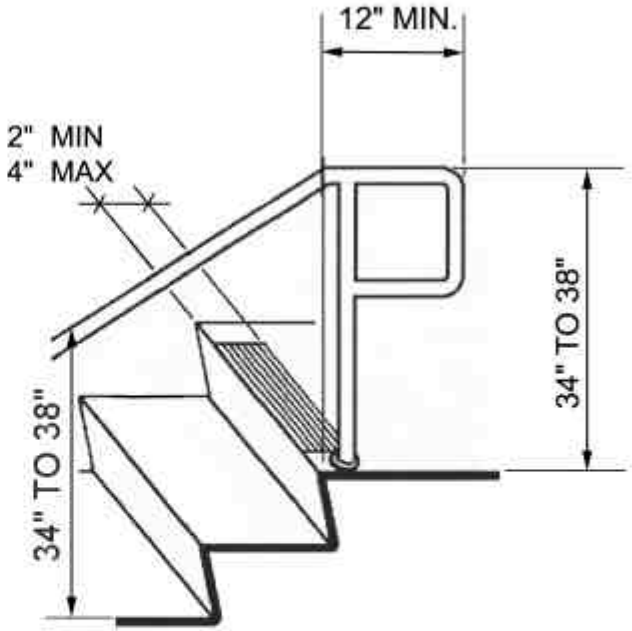

* NOTE: EXTERIOR STAIRS - ALL TREADS ARE TO HAVE WARNING STRIPS

WARNING STRIPING AND HANDRAIL EXTENSIONS

Chapter 41

STORAGE AREAS / LOCKERS

I. Concept

A. At least one of each type of storage area provided shall be accessible (cabinets, shelves, closets, drawers, etc.). *(T24-1125B.1)*

II. Doorways

A. The entrance door to the storage areas (except shallow closets) shall have a minimum width opening of 32". *(T24-1110B.2.2)*

B. Shallow (not walk-in) closet storage areas shall have a minimum 20" door opening. *(ADAAG-4.13.5)*

III. Approach Space

A. Clear space immediately adjacent to the storage area/locker shall be a minimum of 30" x 48". *(T24-1125B.2)*

B. One full, unobstructed closet side shall adjoin or overlap an accessible route or another clear space. *(T24-1118B.4.2)*

C. Storage areas located in an alcove or confined on all, or part of, 3 sides shall have additional maneuvering clearances provided. *(T24-1118B.4.2)*

IV. Reaches

A. Side accessible storage areas and lockers positioned between 9" and 54" from the floor shall have a maximum 10" horizontal reach over an obstruction (24" maximum reach if the height does not exceed 46"). *(T24-1125B.3)*

B. Front accessible storage areas and lockers positioned between 15" and 48" from the floor shall have a maximum 20" horizontal reach over an obstruction (25" maximum reach if the maximum height does not exceed 44"). (*T24-1118B.5)*

C. Hardware shall be operable with one hand without tight grasping, pinching or twisting of the wrist and with a force no greater than 5 lbs. *(T24-1117B.6.4/T24-1125B.4)*

Chapter 42

SWIMMING POOLS

I. Concept

A. Access to swimming is dependent on getting to the pool area and getting into and out of the water.

B. Swimming pool deck areas must be accessible, and an assistive device must be provided to assist persons with disabilities in gaining entry into the pool.

C. There shall be an unobstructed path of travel from accessible parking to the swimming pool. Refer to Buildings, Chapter 7 and/or Routes of Travel, Chapter 34. *(ADAAG-4.3/T24-1114B.1.2)*

II. Safety Features

A. Float dividers, colors, textures and pavement markings should be used to clearly indicate increasing water depth.

B. Colors and textural cues should be used to clearly indicate pool and ramp edges and other high-risk areas.

C. Paving shall be non-slip and non-abrasive to bare feet. *(T24-3113B.1)*

D. Pool edges should be rounded ¾" to 1½" radius.

E. There shall be a minimum 48" wide unobstructed path of travel around the pool. *(T24-3113B.1)*

III. Pool Access

A. At least two means of entry and exit shall be provided for each swimming pool. The primary means of access shall be a ramp (sloped entry) or lift. *(RFP-15.8.1)*

B. The secondary means of access shall not duplicate the primary means but may be transfer walls, transfer systems or stairs. (*RFP-15.8.1)*

C. Swimming pools with a perimeter less than 300 linear feet will have one means of access, which must either be a lift or a ramp (sloped entry). *(RFP-15.8.1)*

IV. Ramps (Sloped Entries)

A. Ramp access into the water shall be an accessible route. *(RFP-15.8.5.1)*

B. Ramps into swimming pools shall meet the following criteria:

1. Ramps shall meet the requirements of ADAAG-4.8 when sloped entry exceeds 5%. The following modifications will be used:
   a. Ramps shall extend to a depth of 24"minimum to 30" maximum below the stationary water level.
   b. There shall also be at least one landing located 24" minimum to 30" maximum below the stationary water level. *(RFP-15.8.5.2) (Refer to Ramps, Chapter 31.)*

2. Handrails are required on all sloped entries. *(RFP-15.8.5.3)*
3. The clear width between handrails must be between 33" and 38". *(RFP-15.8.5.3)*

V. Benches

A. Refer to Fixed Benches, Chapter 21.

VI. Steps

A. Pool stairs shall comply with ADAAG-4.9. The following modifications will be used: *(RFP-15.8.8.1-.2) (Refer to Stairs, Chapter 40.)*
B. Handrails shall comply with RFP-15.8.8.2.

VII. Additional Criteria

A. If showers, lockers, drinking fountains or towel racks are provided, refer to Bathing, Storage Areas, Drinking Fountains or Reaches Chapters.

VIII. Pool Lifts

A. When provided, pool lifts shall meet the following criteria:
1. In the raised position the centerline of the lift seat must be located over the pool deck, at least 20" minimum from the edge of the pool. *(RFP)*
2. A minimum clear deck space shall be on the side of the seat opposite the water. The space is measured from the seat. It shall be a minimum of 30" wide and 48" long from a line located 12" behind the intersection of the seat and its back. The space shall be clear and free of deck braces that can interfere with the transfer. *(RFP-15.8.4.2)*
3. The height of the lift seat shall be 16" to 18" above the deck floor. The height is to be measured from the deck to the top of the seat surface when the seat is in the raised (loaded) position. An adjustable seat may be used. *(RFP-15.8.4.3)*
4. The lift seat shall be a minimum of 16" wide. *(RFP-15.8.4.4)*
5. Footrests shall be provided and move in conjunction with the seat. If provided, armrests shall not obstruct with the transfer. *(RFP-15.8.4.5)*
6. Pool lifts shall be capable of unassisted operation from both the deck and water levels. *(RFP-15.8.4.6)*
7. Controls shall be unobstructed when a lift is in use. *(RFP-15.8.4.6)*
8. Controls shall not require tight grasping, pinching or twisting of the wrist and no more than 5 lbs. of pressure to operate. *(ADAAG-4.27.4)*
9. Pool lift seats shall submerge to a water depth of 18" minimum. *(RFP-15.8.4.7)*
10. Single pool lifts shall provide a minimum weight capacity of 300 lbs. Lifts shall also be capable of sustaining a static load of at least 3 times the rated load. *(RFP-15.8.4.8)*

IX. Transfer Walls

A. Transfer walls provide a surface as the edge of a pool for transfer into the water. They may be elevated walls at the pool edge or lowered sections of the deck. A transfer wall may be used as a secondary access and must be combined with a lift or ramp (sloped entry). *(RFP-15.8.6)*

B. When provided, transfer walls shall meet the following criteria:

1. Clear deck space of 60" x 60" minimum shall be provided at the base of a transfer wall. Where one grab bar is provided, the clear deck space must be centered on the grab bar. Where two grab bars are provided, the clear deck space must be centered on the clearance between the grab bars. *(RFP-15.8.6.1)*
2. The height of the transfer walls shall be 16" to 18" measured from the deck below. *(RFP-15.8.6.2)*
3. The depth of the wall shall be 12" to 16". *(RFP-15.8.6.3)*
4. The transfer wall shall be free of sharp edges. *(RFP-15.8.6.4)*
5. The transfer wall shall have at least one grab bar. They are to be perpendicular to the pool wall and extend the full depth of the wall. The top of the gripping surface shall be 4" maximum above the wall.
   a. Where two grab bars are provided, clearance between the grab bars shall be 22" minimum.
   b. Where one grab bar is provided, clearance shall be 22" minimum on both sides of the grab bar.
6. Grab bars must comply with ADAAG-4.26.

X. Transfer Systems

A. Transfer systems consist of a transfer surface, combined with a series of transfer steps that descend into the water. Users must transfer from their wheelchair or mobility device to a surface and continue transferring from step to step. A transfer system may be used only as a secondary means of access in a larger pool with 300 linear feet or more of pool wall and must be combined with either a lift or a ramp (sloped entry). *(RFP-15.8.7)*

B. The transfer platform shall be 19" deep by 22" wide minimum and be provided at the head of each transfer system. *(RFP-15.8.7.2)*

C. The clear deck space shall be 60" x 60" minimum with a slope no steeper than 2.1% at the base of the transfer platform. The unobstructed level space shall be centered along the 22" side. *(RFP-15.8.7.2)*

D. The height of the transfer platform shall be between 16" and 18" measured from the deck. *(RFP-15.8.7.3)*

E. Transfer step risers shall be a maximum of 7" in height and extend to a water depth of 18" minimum. Transfer steps shall have a tread depth between 12" and 17". *(RFP-15.8.7.4-.6)*

F. The surface of the transfer system shall be free of sharp edges. *(RFP-15.8.7.5)*

G. There shall be one grab bar on each step to be located so that the grab bar does not obstruct transfer at either a transfer platform or a transfer step. *(RFP-15.8.7.7)*

Chapter 43

TRAILS

I. Concept

A. Unlike Exterior Routes of Travel (ERT) and Outdoor Recreation Access Routes (ORAR), trails provide the means for the activity of hiking. Trails provide access to remote locations, unique park features and they offer visitors the opportunity to experience various environmental settings.

B. Wherever hiking is considered one of the primary activities offered, or where there is a large concentration of trails, every effort should be made to install and maintain accessible trails. The accessible trails should represent the most significant features and environmental experiences unique to the area.

II. Trails

A. General

1. Running slopes in the direction of travel shall be as follows:
   a. 5% or less for any distance. *(99AG-16.2.7.2.1)*
   b. From 5.1% to 8.33% for 200' maximum. *(99AG-16.2.7.2.2)*
   c. From 8.34% to 10% for 30' maximum. *(99AG-16.2.7.2.3)*
   d. From 10% to 12% for 10' maximum. *(99AG-16.2.7.2.4)*
2. Resting spaces shall be 60" minimum in length, shall have a width at least as wide as the trail and have a slope of 5% or less. The installation of resting spaces is required as follows: *(99AG-16.2.8)*

Percent slope	Maximum length	Rest interval
0% to 5.0%	No restriction	No restriction
5.1% to 8.33%	200'	Every 200'
8.34% to 10%	30'	Every 30'
10.1% to 12%	10'	Every 10'

3. The slope perpendicular to the direction of travel, cross slope, shall be 5% maximum. *(99AG-16.2.7.1/Exception: See Section B, Details for slope requirements at open drainage structures.)*
4. The clear tread width shall be 36", except the width may be reduced to 32" where existing conditions cannot be mitigated. *(99AG-16.2.2)*
5. The surface of the trail shall be stable and firm. *(99AG-16.2.1)*

B. Details

1. Openings in the surface, such as on a boardwalk, shall not be greater than ½" wide. Elongated openings shall be placed so that the long dimension is perpendicular or diagonal to the dominant direction of travel. Exception: openings are permitted to run parallel

to the direction of travel so long as the opening is no wider than ¼". *(99AG-16.2.3)*

2. Objects that protrude into the trail between 27" and 80" from the ground shall not protrude more than 4". Objects mounted below 27" may protrude any amount but shall not reduce the clear width of the trail. *(99AG-16.2.4)*
3. Vertical clearance shall be 80". If the 80" vertical clearance of the trail cannot be mitigated, a cane detectable barrier to warn the visually impaired shall be provided. *(99AG-16.2.4)*
4. For open drainage structures a running slope of 14% is permitted for 5' maximum with a cross slope of 5% maximum. Cross slope is permitted to be 10% at the bottom of the open drain where the clear tread width is at least 42" wide. *(99AG-16.2.7)*
5. Tread obstacles such as roots or rocks shall not be higher than 2". Exception: obstacles may be up to 3" high where the running slope and cross slope are 5% or less. *(99AG-16.2.5)*
6. Where the width of the trail is less than 60", passing spaces measuring 60" x 60" shall be provided at intervals of 1000'. *(99AG-16.2.6)*
7. Where edge protection is provided, it shall have a height of 3" minimum. *(99AG-16.2.9)*
8. Trails that meet the above guidelines shall be designated with a symbol at the trailhead and at designated access points. Signage shall indicate the total distance of the accessible segment and the location of the first point of departure from the guidelines. *(99AG-16.2.10)*

Chapter 44

VISITOR INFORMATION / SALES AREAS

I. Concept

A. Information stations are primarily located at entrance stations, visitor centers and campground facilities. It is strongly recommended that visitor information areas provide auxiliary aids to ensure effective communication to the public. Auxiliary aids and alternate form means:

1. Verbal/auditory information is available in written form.
2. Visual/graphic information is available in audio form and in large print form.
3. Information should be posted if a TTY (teletypewriter) or hearing aid-compatible telephone is available.

II. Counters and Sales Areas

A. Counters/Sales areas must be on an accessible route of travel. *(Refer to Buildings, Chapter 7.)*

B. Information counters/sales areas shall have a portion of the counter surface accessible to persons who use wheelchairs. Sales areas shall be signed with the International Symbol of Accessibility (ISA). *(T24-1110B.1.3/T24-1122B.3-4)*

C. Such space shall be a minimum of 3 linear feet for every 12 linear feet or fraction thereof of counter length. This section of the counter shall be at least 36" wide and 28" to 34" high from the finished floor elevation. *(T24-1122B.3-4)*

D. This space shall have a 19" minimum deep toe/knee recess space, with 27" minimum vertical clearance from the floor surface. *(T24-1122B.3-4)*

E. Merchandise and sales items must be placed between 9" and 54" for a side approach and between 15" and 48" for a front approach. *(T24-1118B.5-6)*

F. Maximum side reach over an obstruction shall not exceed 24". *(T24-1118B.6)*

III. Checkout Area

A. At least one, but never less than 25%, of all check stands shall be made accessible by providing a 36" checkout aisle or space on the customer side of the check stand. *(T24-1110B.1.3/T24-1133B.6.2)*

IV. Point Of Sale Machines

A. If provided, all point of sale machines, except drive-up, shall meet the criteria for clear spaces. Refer to Buildings, Chapter 7 and Service Machines, Chapter 35.

V. Turnstiles

A. Refer to Doorways, Chapter 13.

VI. Site Information

A. The International Symbol of Accessibility (ISA) shall be the standard used to identify facilities that are accessible. *(T24-1117B.5.1.1)*

Chapter 45

VISTA POINTS / OVERLOOKS

I. Concept

A. Vista points, their features, views and experiences they provide, must be accessible. *(99AG-16.10.1)*

B. Where multiple viewing areas are provided, a minimum of one of each viewing opportunity for each distinct point of interest shall be accessible. *(99AG-16.10.1)*

C. Vista points and overlooks shall be located on an accessible route of travel, including an Outdoor Recreation Access Route (ORAR) or accessible trail. *(99AG-16.10.1)*

II. Viewing Area

A. The viewing area shall have at least one maneuvering space of 60" x 60" or a T-shaped space at least 36" wide and 60" long on each leg. *(99AG-16.10.2/ADAAG-4.2.3)*

B. The maneuvering space shall be firm, stable and shall not exceed a 2% slope in any direction. *(99AG-16.10.4-5)*

C. Each distinct viewing opportunity shall allow unrestricted viewing to accommodate eye levels between 32" and 51". *(99AG-16.10.3)*

III. Fixed Viewing Devices

A. Where telescopes or periscopes are provided in an area, at least 20%, but never less than one, shall be accessible. *(99AG-16.11.1)*

B. Where only one telescope or periscope is provided it must be useable from a seated and standing position. *(99AG-16.11.1.1)*

C. Within the vista point or viewing area accessible telescopes/periscopes shall be connected by an Outdoor Recreation Access Route (ORAR). *(99AG-16.11.1.1)*

D. A stable and firm clear space measuring 30" x 48" shall be provided in front of the accessible telescope/periscope to allow for a forward or parallel approach. *(99AG-16.11.2-3)*

E. The slope of the clear space shall not exceed 2%. *(99AG-16.11.5)*

F. The eyepiece of accessible telescopes/periscopes shall be useable from the seated position. *(99AG-16.11.3)*

G. The force required to activate the controls shall not be greater than 5 lbs. of pressure. *(99AG-16.11.2/ADAAG-4.27.4)*

H. The operating controls shall be operable with one hand and shall not require tight grasping, pinching or twisting of the wrist. *(99AG-16.11.2/ADAAG-4.27.4)*

I. The operating controls shall be located between 15" and 48" for a forward approach and between 9" and 54" for a parallel approach. *(99AG-16.11.2/ADAAG-4.27.3)*

Chapter 46

WORK AREAS

I. Concept

A. Work areas shall be accessible in newly constructed and remodeled facilities. Special accommodations may be made for individuals with specific needs. Contact the Human Rights Office for work related accommodation issues.

II. Dimensions

A. The height of work surfaces shall be between 28" and 34" above the floor. *(T24-1122B.4)*

B. There shall be a minimum knee space of 27" high, 19" deep and 30" wide provided under the bottom of the work surface. *(T24-1122B.3)*

III. Aisles

A. Aisles in work areas must be a minimum of 36" if serving one side and 44" if serving both sides. *(T24-1123B.2/T24-1133B.6.2)*

Glossary

Access Networks	A series of accessible, interdependent, related facilities, programs and activities with a continuous path of travel that connects these facilities, programs and activities.
Accessible Route	A continuous unobstructed path connecting all accessible elements and spaces of a building or facility.
Alcove	A small recessed opening off of a larger space.
Alteration	Modification made to an existing building or facility that goes beyond normal maintenance activities and affects or could affect usability.
American Sign Language	The sign language used in the United States. Language expressed by visible hand gestures.
Americans with Disabilities Act of 1990 (ADA)	A Federal law prohibiting discrimination against people with disabilities.
Americans with Disabilities Act Accessibility Guidelines (ADAAG)	Provides scoping and technical specifications for new constructions and alterations undertaken by entities covered by the ADA.
Architectural Barriers Act of 1968 (ABA)	A Federal law stating that buildings and facilities designed, constructed or altered with Federal funds, or leased by a Federal agency, must comply with standards for physical accessibility.
Assembly Areas	A room or space accommodating a group for recreational, educational, political, social, civic or amusement purposes.
Assistive Device	A device that assists users in accomplishing day-to-day functions (e.g. a wheelchair is an assistive device to assist a person who cannot walk).
Assistive Listening System	A device used by an individual to amplify an audio presentation.
Audible Warning	A warning consisting of words or sounds indicating a potentially hazardous situation.
Barrier to Access	Any condition that makes it difficult to make progress or to achieve an objective.

Barrier Removal	Removal, rearrangement or modification of objects positioned or structured in a manner that impedes access.
Bevel	Two surfaces meeting at an angle less than 90°.
Braille	A system of writing, composed of raised dots in different patterns, that represents letters and numbers read with the fingertips by people who are blind. Grade II Braille is the most commonly used in North America. The word "Accessible" in braille follows: 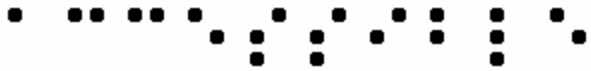
Buildings	Any and all portions of permanent structures occurring on or in support of a State Park unit, including concession buildings, dispatch areas, dormitories, employee housing, entrance kiosks/stations, first aid stations, janitorial rooms, kiosks, laboratories, museums, offices, restrooms, storage areas, theaters and visitor centers.
California Relay Service	The service provided for persons with hearing impairments to relay between audio phone calls and text telephone systems.
Captioned	Captions consist of a *text transcript* of the auditory track of the movie, or other video presentation, that is synchronized with the video and auditory tracks. Captions are generally rendered graphically and benefit people who can see but cannot hear the audio.
Clear Floor Space	The minimum unobstructed floor space required to accommodate a single, stationary wheelchair and occupant (30" x 48" x 27" high).
Clear tread Width	The width of the useable surface measured perpendicular to the direction of travel.
Core Area	The area with the greatest concentration of pedestrian traffic (including persons who use wheelchairs), amenities, services and facilities.
Cross Slope	The slope measured perpendicular to the direction of travel.
dbA	Decibel, increments in which sound is measured.
Detectable Warnings	A standardized surface feature of raised dots applied to walking surfaces to warn visually impaired people of hazards.

Disability	An individual is defined as having a disability when one or more of the following conditions apply: (1) a physical or mental impairment that limits one or more of the major life activities of an individual, or (2) a record of such an impairment, or (3) being regarded as having such an impairment.
Edge Protection	A curb or wheel-guide rail used to protect an area having a hazardous drop-off.
Egress, Means of	A continuous and unobstructed way of exit travel from any point in a building or facility to a public way. An accessible means of egress is one that complies with these guidelines and does not include stairs, steps or escalators.
Elevation	The distance of something above a reference point
Exterior Route of Travel	The primary path of travel connecting major components of facilities (i.e. parking lot to a building). Slope in the direction of travel is a maximum of 5%.
Firm Surface	An outdoor environment resisting indentation from a walking person's foot.
Foot Candles (light level)	A unit of illuminance on a surface from a point source of 1 candle, used to measure light intensity.
Gangway	A moving structure spanning between land and a floating structure.
Grade	The slope parallel to the direction of travel that is calculated by dividing the vertical change in elevation by the horizontal distance covered.
Horizontal Circulation Space	A minimum 5' wide circular space directly in front of an exhibit allowing all visitors the same opportunity to approach, turn and leave the exhibit.
International Symbol of Accessibility (ISA)	The symbol adopted by Rehabilitation International for the purpose of indicating facilities that are accessible to persons with disabilities.
Landing	A platform between elevation changes in a route of travel (often used when stairs change direction). Normally no less than 3' x 3' square.

Level Area	A surface that does not have a slope in any direction exceeding 2% (1:50) gradient.
Newel	The post at the top or bottom of a flight of stairs that supports the handrail.
Obstacle	An object that limits the vertical passage space, protrudes into the circulation route or reduces the clearance width of a pathway. On trails, obstacles can include objects such as boulders, drop-offs and tree branches.
Optimal Field of Vision	The most comfortable cone or field of vision appropriate for signs, displays and exhibits covers an arc of approximately 45°, from 15° above the horizontal eye to 30° below it. This applies to both the standing and seated person.
Outdoor Recreation Access Route	A continuous unobstructed path designated for pedestrian use that connects accessible elements within a picnic area, camping area or designated trailhead. May have a higher percent slope in direction of travel than an Exterior Route of Travel.
Point Load	The ability of an object to withstand a certain weight at one point.
Prevailing Sound Level	The ambient sound level audible alarms must exceed.
Protruding Object	Something that juts out or projects into a pathway and may cause injury or block access.
Radiating Sound Wave	The sign identifying accessible public telephones with volume control and hearing aid compatibility.
Ramp	A firm, inclined surface, which has a running slope steeper than 5% (1:20) used to provide connection between elevation changes.
Reach Ranges	The distance limits that allow wheelchair users to access facilities and devices (i.e. electrical switches and alarms) shall be placed no higher than 48" above the floor.
Reasonable Accommodation	Modifications or adjustments to a program, work environment or job description that make it easier for a person with a disability to participate in the same manner as other employees.

Rest Area	A level portion of a trail that is wide enough to provide wheelchair users and others a place to rest and gain relief from the prevailing grade and cross slope demands of the path.
Riser	The vertical portion of a step in a staircase that connects the top of a tread to the next higher tread.
Sans Serif	A typeface in which characters have no serifs.
Serif	A short line at the ends of the main strokes of a character, making reading more difficult for sight impaired persons.
Slip Resistant Surface	Slip resistance is based on the frictional force necessary to permit a person to ambulate without slipping. A slip resistant surface does not allow a shoe heel, wheelchair tires or a crutch tip to slip when ambulating on the surface.
Stable Surface	Stability is the degree to which a surface remains unchanged by contaminants or applied force, so that when the contaminant or force is removed the surface returns to its original condition. A stable surface is not significantly altered by a person walking or maneuvering a wheelchair.
Stanchion	An upright bar, post or support.
Strike Edge Clearance	The clearance from the strike edge of a door to the first protrusion or obstruction.
Tactile	An object that can be perceived using the sense of touch.
Teletypewriter (TTY)	Equipment that employs interactive text based communications through the transmission of coded signals across the standard telephone network. Text telephones can include, for example, devices known as TDDs (telecommunication display devices or telecommunication devices for deaf persons) or computers with special modems. Text telephones are also called TTYs, an abbreviation for tele-typewriter.
Title II of the Americans with Disabilities Act of 1990	The section of the Americans with Disabilities Act of 1990 that prohibits State and local governments from discriminating against people with disabilities in programs, services and activities.
Title 24	A section of the California Code of Regulations, also known as the California Building Code, that, in part, addresses accessibility in buildings and facilities.

Trail	A route that is designed, designated or constructed for recreational pedestrian use or provided as a pedestrian alternative to vehicular routes within a transportation system.
Transcript	A "transcript" is a text representation of sounds in an audio clip or an auditory track of a multimedia presentation. A "collated text transcript" for a video combines (collates) caption text with text descriptions of video information (descriptions of the actions, body language, graphics and scene changes of the visual track). Collated text transcripts are essential for individuals who are deaf-blind and rely on Braille for access to movies and other content.
Tread Surface	The surface of a pathway or upper horizontal part of a step.
Truncated Domes	Small domes with truncated tops that are detectable warnings used at transit platforms, curb ramps and hazardous vehicular ways.
Universal Design	The designing of products and environments to be usable by all people, to the greatest extent possible, regardless of age, size or abilities.
Unloading Aisle	The 5' or 8' wide zone adjacent to an accessible parking stall for passenger loading and unloading.
Wing Wall	A wall protrusion at a right angle to another wall.
Zero Depth Entry	Water entry starting level with dry land and gradually sloping into water.

Index

Access Network.....39, 46, 95, 113
Access Routes.....9, 10, 12, 13, 14, 16, 17, 18, 19, 21, 27, 29, 30, 32, 34, 35, 42, 49, 54, 56, 58, 59, 63, 64, 69, 70, 73, 78, 85, 86, 87, 89, 91, 93, 101, 102, 106, 108, 110, 113. *See Paths*
Aisles and Corridors .....15, 17, 18, 27, 29, 30, 42, 59, 60, 61, 96, 108, 112, 118. *See Paths*
Alarm Systems
  Audible Alarms.....1, 116
  Fire Alarm Pulls.....1
  Visual Alarms.....1
Amenities.....32, 34, 39, 56, 114
Approaches 5, 15, 17, 21, 28, 30, 31, 37, 42, 56, 64, 69, 70, 73, 77, 79, 80, 81, 86, 89, 93, 101, 108, 110, 111, 115
Assembly Areas.....2, 17, 96, 97, 113. *See Campfire Centers*
Assistive Listening Devices 2
Audio-Visual Programs.....3
Automated Teller Machines.....*See Service Machines*
Banquet Areas.....29
Bathing Facilities 4, 7
Beach Wheelchairs.....10, 11
Beaches and Shores 9, 10, 13, 47, 85
Benches.....18, 20, 34, 39, 48, 49, 63, 103. *See Amenities*
Boating 12
  Boat Slips.....12, 13
Braille.....3, 37, 38, 42, 50, 71, 78, 91, 92, 99, 114, 118
Bridges .....*See Gangways and Bridges*
Brochures .....*See Publications*
Buildings.....14, 15, 20, 21, 29, 30, 31, 32, 33, 36, 49, 53, 54, 58, 64, 70, 73, 85, 89, 92, 96, 98, 99, 102, 108, 113, 114, 115, 117
Cabinets .....56. *See Amenities*
Campfire Centers 17
Camping 19, 21, 61, 91, 95, 116
Captioning 71, 118
  Closed-captioning 3
  Open-captioning.....3
Clear Spaces.....5, 7, 14, 15, 16, 20, 21, 28, 30, 32, 34, 42, 47, 49, 56, 63, 64, 65, 79, 80, 81, 89, 93, 94, 101, 110
Clothes Hooks .....5, 79. *See Amenities*
Compliance Review.....72
Concessions.....26, 68, 114

Controls 4, 6, 7, 14, 16, 35, 36, 37, 38, 40, 42, 48, 57, 58, 65, 69, 70, 78, 80, 81, 82, 89, 93, 94, 103, 110, 111
Counters 14, 29, 56, 93, 96, 97, 108
Curb Ramps ..... *See Ramps*
Dining 29
Dining Areas 14
Displays ..... 3, 40, 41, 42, 43, 50, 90, 116, 117. *See Exhibits*
Docks..... See Piers
Doors 5, 7, 30, 31, 32, 34, 36, 37, 38, 54, 73, 74, 78, 79, 80, 86, 87, 92, 101, 117
Doorways..... 14, 15, 18, 30, 32, 34, 54, 78, 101, 109
Dormitories 32, 114
Dressing Rooms 34
Drinking Fountains..... 35, 39, 78, 97, 103
Edge Protection 9, 20, 47, 74, 88, 107, 115
Elevators..... 14, 16, 36, 37, 38, 54, 58, 92, 98
Entrances 14, 18, 30, 31, 38, 54, 59, 60, 61, 73, 78, 85, 91, 101, 108, 114
Equestrian
  Equestrian Facilities 39
  Mounting Platforms 39
Exhibits 16, 40, 41, 42, 43, 50, 51, 52, 55, 96, 97, 115, 116
Exterior Routes of Travel 9, 73, 85, 106, 115, 116
Field of Vision 41, 50, 116
Fire Rings 20, 64
Fireplaces 20, 21
Fishing 9, 46, 47, 48, 91
Flooring..... 56
Gangways and Bridges..... 12, 13, 47, 115
Grab Bars 6, 7, 79, 80, 81, 104, 105
Grills 20, 21, 64
Handrails 12, 37, 47, 74, 86, 98, 99, 103, 116
Hands-On Materials..... 52
Historic Sites..... 53
Hotels 32
Interpreters 3, 50, 51, 96, 97
Kitchens..... 14, 33, 56, 93
Landings 12, 27, 36, 38, 54, 58, 73, 74, 98, 99, 102, 115
Lavatories 78, 81, 82, 93
Lifts 14, 16, 54, 58, 98, 102, *103*, 104
Light Switches 82
Lockers ..... 39, 101, 103. *See Storage Areas*
Mirrors ..... 34, 82. *See Amenities*

Museums 2, 42, 85, 114
Parking 9, 14, 18, 19, 27, 32, 39, 46, 59, 60, 61, 63, 85, 95, 96, 102, 115, 118
Paths 7, 9, 17, 18, 27, 28, 35, 36, 40, 46, 48, 59, 60, 85, 92, 95, 102, 113, 115, 116, 117
Periscopes ..... *See Telescopes*
Picnic Sites 19, 20, 63, 64, 85, 93, 95, 116
Piers 12, 13, 46, 47
Portable Toilets 68, 96
Print 3, 41, 50, 71, 72, 96, 108
Programs 2, 3, 50, 51, 52, 53, 55, 71, 95, 97, 113, 116, 117
Protruding Objects 16, 42, 78, 116
Public Telephones ..... *See Telephones*
Publications 3, 40, 52, 71, 72, 91, 96
Ramps 12, 13, 14, 16, 17, 27, 28, 31, 39, 54, 59, 73, 74, 85, 98, 102, 104, 116
  Curb Ramps 27, 28, 61, 73, 85, 118
Reaches 4, 5, 14, 16, 20, 29, 33, 39, 40, 56, 69, 70, 77, 79, 81, 82, 89, 93, 97, 101, 103, 108, 116
Restrooms 1, 7, 14, 16, 19, 21, 32, 39, 46, 54, 63, 68, 78, 79, 82, 85, 91, 92, 93, 95, 96, 114
Routes 85
RV Camping 19
Safety 10, 13, 46, 91, 102
Sales Areas 97, 108
Seasonal Housing 32
Seating 17, 18, 29, 49, 63, 97
Service Machines 33, 89, 108
Showers 4, 5, 6, 7, 32, 33, 78, 103
  Shower Seats 4
Signage 2, 7, 10, 11, 16, 17, 21, 31, 39, 51, 59, 70, 78, 91, 96, 107
Sinks 14, 56, 81, 82, 93
  Utility Sinks 93, 94
Site Planning 20, 95
Special Events 68, 96
Stairs 13, 14, 50, 98, 99, 102, 103, 115, 116
Steps 98, 103, 104, 105, 115, 117, 118
Storage Areas 14, 33, 39, 101, 103, 114
Surfaces 4, 7, 9, 10, 12, 13, 15, 16, 19, 20, 21, 27, 30, 31, 34, 37, 39, 40, 41, 42, 43, 46, 47, 49, 50, 56, 58, 59, 60, 61, 63, 64, 70, 73, 74, 80, 82, 86, 87, 91, 93, 94, 96, 99, 103, 104, 106, 108, 112, 114, 115, 116, 117, 118
Swimming Areas 10

Swimming Pools 9, 102, 103, 104
Tables 20, 29, 41, 48, 59, 63, 64
Telephones 9, 14, 32, 33, 37, 42, 69, 70, 86, 87, 108, 116, 117
  Text Telephones 70, 114, 117
Telescopes 110
Teletypewriter 71, 108, 117
Toilets 6, 54, 68, 78, 79, 80, 81, 82
Tours 2, 50, 55
Trails 46, 50, 51, 73, 85, 91, 106, 107, 110, 116, 117, 118
Trash Receptacles 20, 21, 64
Urinals 81, 82
Vending Machines ..... *See Service Machines*
Visitor Centers 2, 85, 95, 108, 114
Visitor Information 72, 97, 108
Vista Points 110
Water Faucets 21, 64
Work Areas 112