ELP and ESP Station Handout
Carpentry

"THE MORE THE STUDENT PRATICIPATES IN ALL PHASES OF A PROJECT …….
…***THE GREATER THEIR OWNERSHIP***"

Introduction
This handout will teach you how to run the Carpentry station on an ELP or ESP day. You will also learn the history and craft of woodworking as it would have been done at Sutter's Fort in the 1840s. Through the Carpentry station, your students will also learn about the history of woodworking and have the opportunity to make their own carpentry project to take home.

Objectives
The primary objective of this workstation is to complete the selected woodworking project in the allotted time (about 30-45 minutes per rotation, or about 20 to 25 minutes of effective work time. Rotational time period may vary depending upon the teacher's work plan.)

An understanding of how we work together toward a common end goal, process, or product is ideal; the relationship between the worker, their tools, and the wood are necessary as everyone completes their project in a safe manner.

While running the station you should discuss with the students the history and importance of the carpentry shop, Sutter's carpenters, and the woodworking trade. You will teach shop safety and planning the work day. Learning how to properly use and maintain period hand tools, how to read wood, and understand the social values of pioneer life is important. There are many historical goals to be discussed or referenced such as period school (apprentice, journeyman, guild master), woodworking trades (general carpenters, housewrights, cabinetmakers/furniture makers, specialty woodworkers, wheelwrights, shipwrights/ship carpenters, cartwrights/wagonwrights). Also an understanding of how woodworking has changes over the years.

The People: (Excerpt from the Carpenter Shop Rehab Plan 1984):

Crafts Represented: Coachwrighting, cartwrighting, timber framing, joinery, boxer, cabinet-furniture making, tool stocking, carpentry, and other wood-related crafts.

According to the Kunzel Map (see following page), the carpenter's shop of today is inaccurately placed in relation to the carpenter's living quarters. The living quarters were located at the north end of the existing shop while the original shop extended south,

covering the approximate area of the current walk-in room that adjoins the present shop. More simply, the south wall of the existing shop appears to have been placed roughly ten feet too far to the south, and the respective rooms inverted.

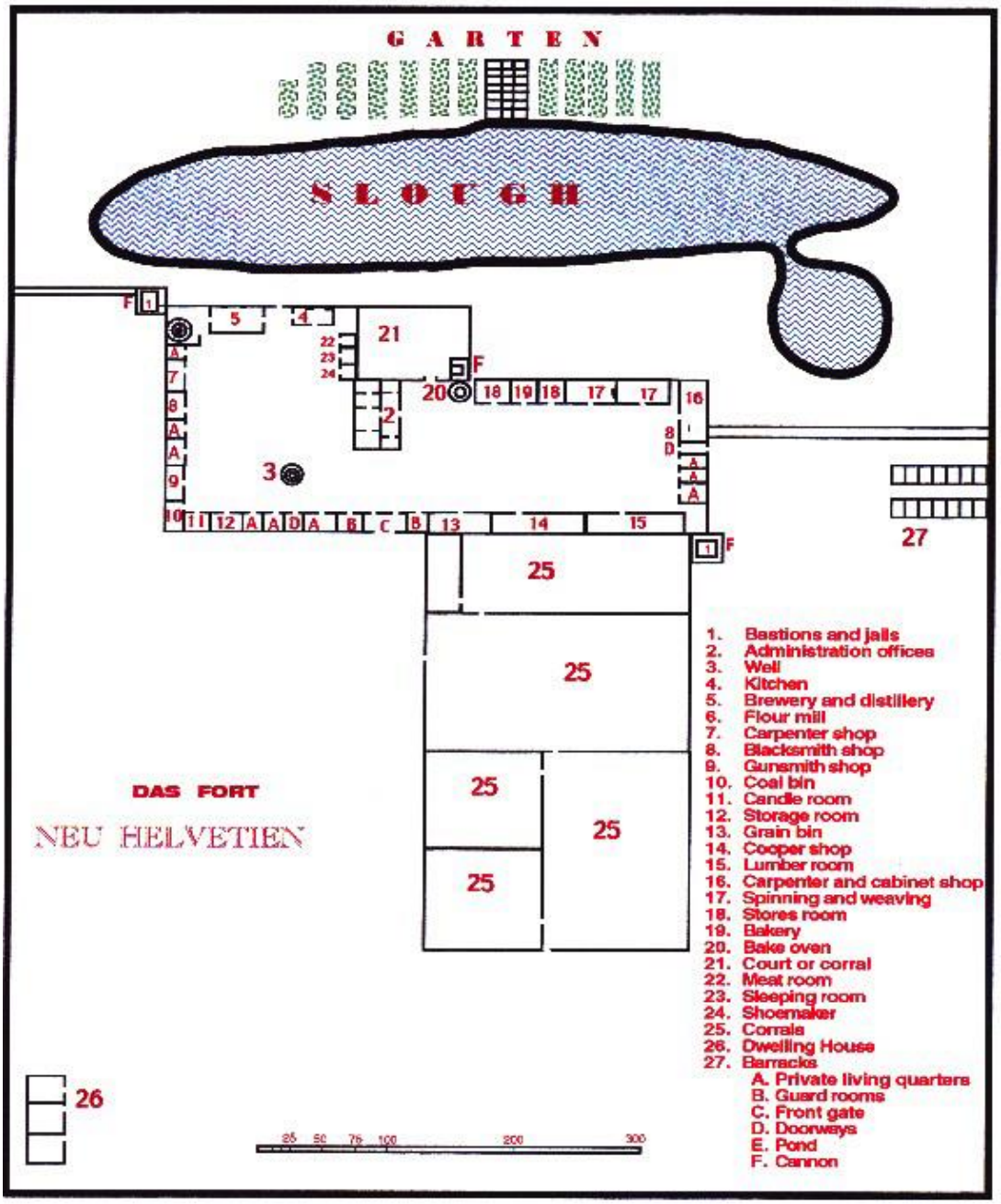

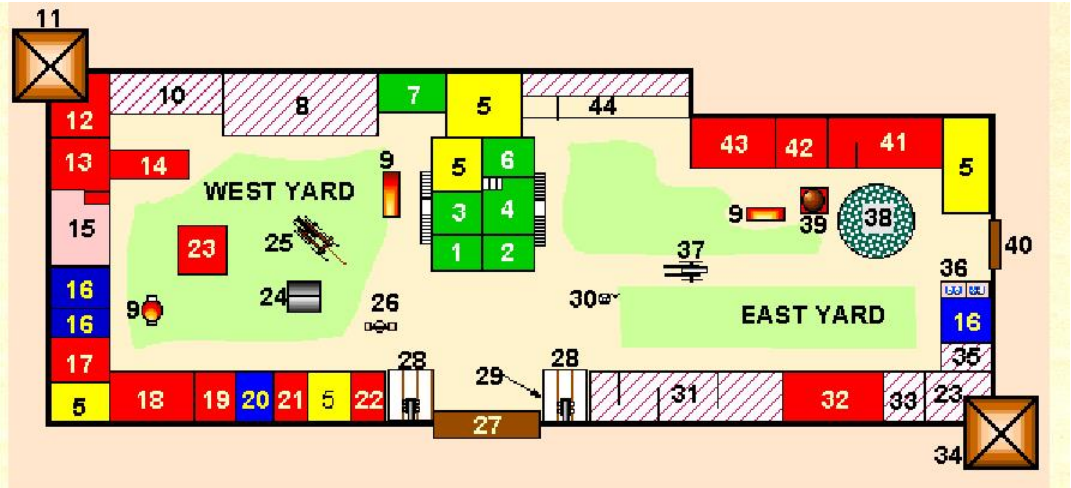

Since the reconstruction of the fort, along with its mistakes, is in itself of historic and cultural value, the advisability of the relocation of the south wall of the carpenter's shop is debatable (Area 13 above is the shop, and Area 14 is the outdoor working area). Since little is known about actual carpenter shop activities at Sutter's Fort, a scenario of the activities and equipment in the shop is based upon documented materials of other functioning shops of the period.

The carpenter's shop at the Fort, in conjunction with the blacksmith's shop, manufactured most of the implements and equipment utilized by people in and about the fort during 1845 through 1847. The woodworking tradesmen (Carpenters, Joiners, Coachwright, Cartwright/Wagonwright, Cabinetmakers, Framers, Sawyers, etc.) would use the carpenter's shop as the focal point of their crafts. Jobs that had to be done about the Fort would have been organized and coordinated by the master carpenter (foreman) under contract to Captain Sutter. One such person was James Wilson Marshall, who became Captain Sutter's chief mechanic (Marshall was a Master Coachwright, Journeyman Wheelwright and Millwright.)

The primary theme we want to convey to the public is that the carpenter's shop was critical to the development of a successful settlement at the Fort and how its products were used in every phase of people's lives. The shop will produce a portion of the furnishings found in the fort. Therefore, the shop's theme becomes the function of the shop and its woodworkers in 1845-47.

AN OVERVIEW OF THE CARPENTER AND HIS TIMES, 1800 - 1846

(Remember, by 1846, Chippendale furniture was antique)

The following concepts of the 1846 carpenter were gleaned from the works cited in the bibliography (Section IX of the Sutter's Fort Carpenter Shop Rehabilitation Plan, 1984).

Carpentry in the 1840s varied in quality with each craftsman. Sutter's Fort had all types of craftsmen, from poor to excellent (apprentice, journeyman, and Master craftsman). Sutter, of course, would have hired only good men, but might have been compelled to use lesser craftsmen when necessary.

Mortise and tenon, wedge, glue, and pegs would be the preferred joinery methods, since they produce a superior bond. Screws, nuts and bolts (both metal and wood), would be used for certain jobs, but sparingly as they were in short supply. Nails (by 1846 were machine cut and coming into California by ship and settler) would be used only for certain types of projects like items not exposed to weather, and items expected to have a short life.

Carpentry of this period was a complex trade, requiring a greater number of skills and knowledge than now because of the greater number of tasks performed by the average woodworker.

The work of the carpenter was closely integrated with everyone's life. Wood products, from pitchers to beds to wagons to houses, were purchased more or less directly from the carpenter.

Carpenter's tools were highly developed and specialized by this period, although the next 40 years would see the introduction of metal-bodied tools replace many of the wooden-stocked tools common in the mid-1800s. (Note: Metal bodied planes and other tools have been found in Egyptian and other ancient civilizations, and most tools have not changed in design for over 4000 years. Design follows function.)

A wide variety of woods were used according to their particular characteristics. These characteristics included not only hardness, but also density, grain direction, resistance to rot and insects, cleavage, expansion, odor, resilience, stability in seasoning, toughness, figure, and resistance to warping or splitting. There is no one, perfect wood. A number of woods that were very important to the l9th century carpenter are not of commercial value today.

Carpenters routinely produced many of their own tools. Both financial and practical considerations account for self-produced tools. Financially, it was imprudent to pay someone else to make what the craftsman could make for himself, and a great portion of the tools of this period were of wood. The metal portions of tools were sold without handles or stocks; ax handles, for example, were not commercially produced in any quantity until approximately the period of the U. S. Civil War. Ax handles, plane bodies and totes, adze handles: such as these were built to suit the hand and arm of the person who would use them. Once the best length, cross-section, and curve were discovered, the individual made a pattern so that subsequent handles could be reproduced identically. Many settlers would have brought ax handle patterns since they too had to make their own. The tool had to fit the job as well as the carpenter. If the job required a special plane or a special jig, the carpenter produced it, limited only by his imagination and the nature of the materials available.

The type of carpentry that can be done at Sutter's Fort State Historic Park is dependent upon two major factors:

1. The kinds of tools that can be made available, and made at the Fort.

2. The kinds of woods that can be acquired. More historical research is necessary to determine exactly what was done, but much can be surmised with accuracy. Finding native species of trees that were here in 1846 has been made more difficult because most of the native Californian varieties have been replaced with imported species that have a higher commercial value. We have found lists of the types of trees found in the valley and foothills, and we are always in the process of trying to obtain a working stock of those woods for use at the fort.

Eighteenth century carpentry, especially in fixed settlements such as Williamsburg, use primarily seasoned lumber. Use of seasoned lumber is the luxury of an established community, since air seasoning requires a minimum of eight months to a year. Trees would be felled in late January or early February (California seasons) when the sap was down, and ready for use by October at the earliest. Oak would be ready for use by February of the following year. Seasoned oak or cottonwood would be the preferred materials for floor planking.

Nineteenth century country carpentry, on the other hand, made extensive use of green wood. The joinery of green wood carpentry differs from that of seasoned wood carpentry because of the different characteristics of the two materials green wood work makes allowances for shrinkage and also takes advantage of it. For example, a mortise cut into

green wood will shrink around a slightly seasoned tenon to form a joint that will never need glue or fasteners of any kind and will grow stronger with age. In time, the two woods will become almost welded together. Green wood and seasoned wood carpentry are appropriate for the period of Sutter's Fort, depending on the task at hand, both would have been used.

While only further research will show the actual quality of woodwork produced at the Fort, the potential quality can be known; potentially, it would have been of the highest quality. The presence of men such as James Marshall, a carriage-maker, assures us of this because the carriage-maker was the most highly skilled carpenter of the period.

The Place

All of the wood working activities will occur under and around the covered work area in front of the Carpenter shop unless otherwise instructed by the ELP Coordinator.

Wood workers usually did not work inside the shop during a normal day because the daytime light was much better outside than inside the shop. People only worked inside the shop during really bad weather and at night. Most of the time the shop was used as a place to safely store tools and equipment not need for that day's tasks. During the hot summer days the shop was also used as a cool place to rest during the hottest part of the day. In the hot weather people would work from about 5:00 a.m. to 1:30 p.m., eat the mid-day meal and rest until about 6:30 p.m. and work until about 10:00 p.m. (7 days a week).

NOTE: under no circumstances will anyone be allowed in the Carpenter Shop room. The Carpenter Shop has too many sharp tools and equipment out in the open and someone could get hurt. The shop is a working display for the general public, and any ELP activities in the shop could (and has happened in the past) destroy elements in the shop.

Materials You Need to Provide

- The wood for the carpentry projects
- Period nails

Materials the Fort Provides

- Hammers
- Saws
- Clamps
- braces (drills)

Safety Precautions

- Do not allow anyone to play with the tools or the materials in or around the shop or Fort. Tools are sharp and can cut very deeply if you are not paying attention to what you are doing. If someone injuries themselves, contact Fort staff immediately

- Watch for unsafe situations to occur and stop them before they get out of control.

- If the weather is going to be cold, make sure you are dressed to keep warm (if possible wool clothing). If it is raining wool clothing will keep you warm even if you get totally soaked. Bring dry clothing to wear at night, or after you get out of the rain.

- If the weather gets warm or hot (80°F or higher) drink plenty of fluids (adults more so than children) and keep the salt levels high. Iced lemonade, apple juice, tea are period, and salt crackers, jerky, any salted meat, onions, garlic chips, raw salt are period electrolyte restoration foods. Adults lose more water and body salts than children (more skin area). A wet cloth (cotton or linen) around the neck will keep the body cooler. Do not take off shirts and expose the skin to the sun; this is not period, and it is not safe. Wear cotton or linen long sleeved underwear (like long john tops) under the over-shirt. The natural fibers will draw the sweat from the skin and act like a swamp cooler. Our ancestors knew this but we have forgotten this simple solution. No shorts, again loose fitting linen or cotton pants will keep the sun from burning the skin. Wear wide brimmed hats to keep the neck and face shaded (straw, or light felt/canvas are period hat making materials) <u>DO NOT WAIT UNTIL YOU FEEL SICK OR FAINT TO START DRINKING FLUIDS AND EATING SALTED FOODS (By then it may be too late, if this does occur get yourself to the air conditioned rangers' office and ask for help!).</u> You should start the increased salt intake 12 to 24 hours prior to arriving at the fort. Increase fluid intake as soon as you start to sweat. (NOTE: those of us at the Fort who follow these rules have been able to work when it's at 117°F inside the Fort, and only feel tired at the end of the day, and not feel wasted and drained of all energy for the next few days.)

- Keep children away from open flames. If children have to be around flames, make sure they wear a wool apron or are wearing wool over-clothes. Wool is one of the few fabrics that will slow down fire and smother burning embers. All other fabrics either burn easily or melt and will increase the burn damage. Keeping buckets filled with water near open fires is a good practice.

The Craft

A. Supplies

- **1840s PERIOD NAILS:** 1¾" long "Box" nail (5 penny) square/cut nail. NOTE: All nailing must use cut nails since round/wire nails were not available at the time, and square nails have a 1840s historical connection to Sutter's Fort. Wareham Nail Company manufactured cut nails that found their way to the Fort via land and sea. The Wareham Nail Company is now known as Tremont Nail Company. See contact info below and more info at the back of this info package.

  Tremont Nail Company
  457 School Street,
  Mansfield, MA 02048

  Tremont Nail Company
  P.O. Box 31
  Mansfield, MA 02048

  Customer Service Department
  Monday - Thursday: 8:00am - 5:00pm (EST)
  Friday: 8:00am - 4:00pm (EST)
  Tel: 800-835-0121, 508-339-4500
  Fax: 508-339-0104

- **WOOD:** Pine, molding quality, not general grades. Any knots in the wood should be solid and not loose. 1" thick stock is traditionally 3/4" to 7/8" in thickness which will depend upon sanding/finishing of surfaces from the wood supplier. Sources can include building supplies, hardware, wood supply, cabinet/furniture shops, or housing developments. Donations or wholesale prices are best, discounts not as good, retail prices should be avoided if at all possible. Douglas Fir should be avoided due to pitch pockets; redwood should also be avoided due to splinters and the fact that redwood splinters fester quickly. However, Poplar is a very fine wood for projects. It has a similar weight to pine and wears better; however, due to its hardness, pre-drilling nailing holes is mandatory. Brace and Bit/"Egg beater" style drills can be used in the school room to drill the holes.

- **SHAKER PEGS:** For those schools planning to build hat/clothing/key racks projects, dowels are normally used, however, "Shaker Pegs" were made and available in the 1840s. The pegs can be found in many craft stores or some

woodworking stores like Woodcraft Supply.

B. PROJECTS & SOME PLANS:

The following list of projects starts with the simplest and goes to the most difficult. Behind each project is a list of (letters) that will identify which tools could be used by the students to prep and manufacture the project type: **H** = Hammer; **D** = Drill; **S** = Saw; **P** = Pliers or wrench; **A** = Plans and/or parts list included in this section; **X** = Project may require some pre-assembly and/or precut parts prior to coming to the Fort**.**

• Candle Holder (basic, tin-can reflector) (S, D, H)

• Boot Jack (S, D, H)

• Coat/hat/key Racks (S, D, H)

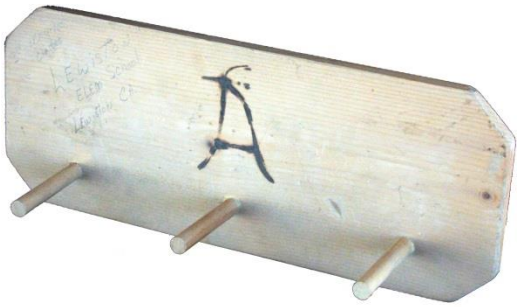

- **Recycled Container (S, D, H)**

- **Tic-Tac-Toe game (S, D, Paint)**

- **Carrier (S, D, H, X)**

- **Stool, Stool Box, Box Stool (S, D, H, A, X)**

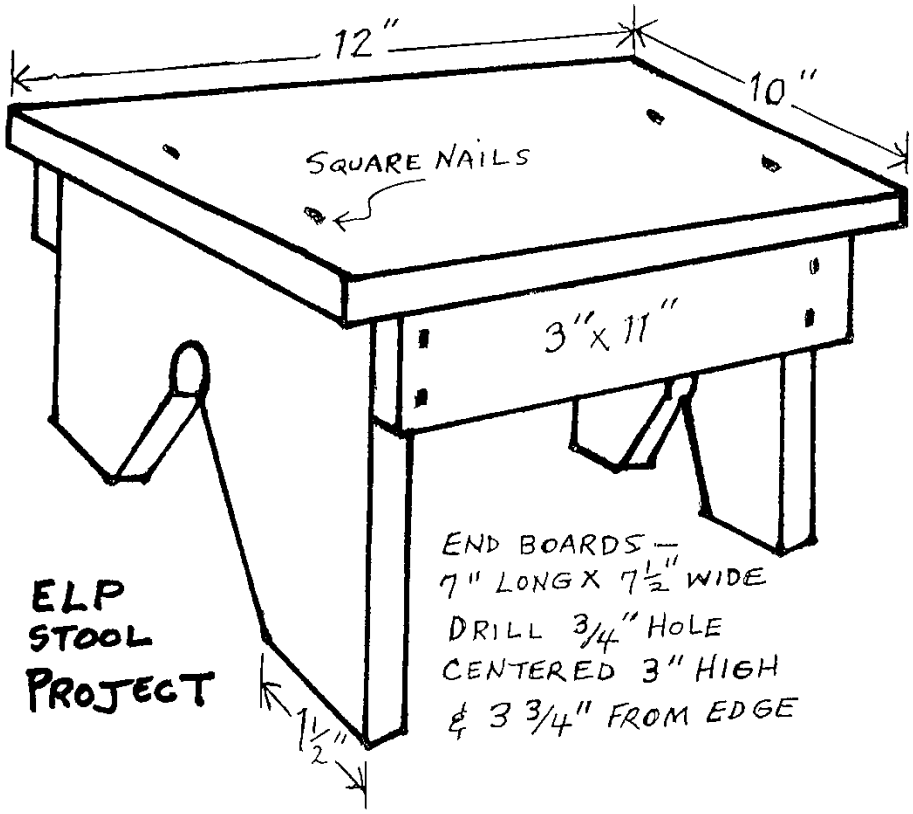

SUTTER'S FORT
STATE HISTORIC PARK

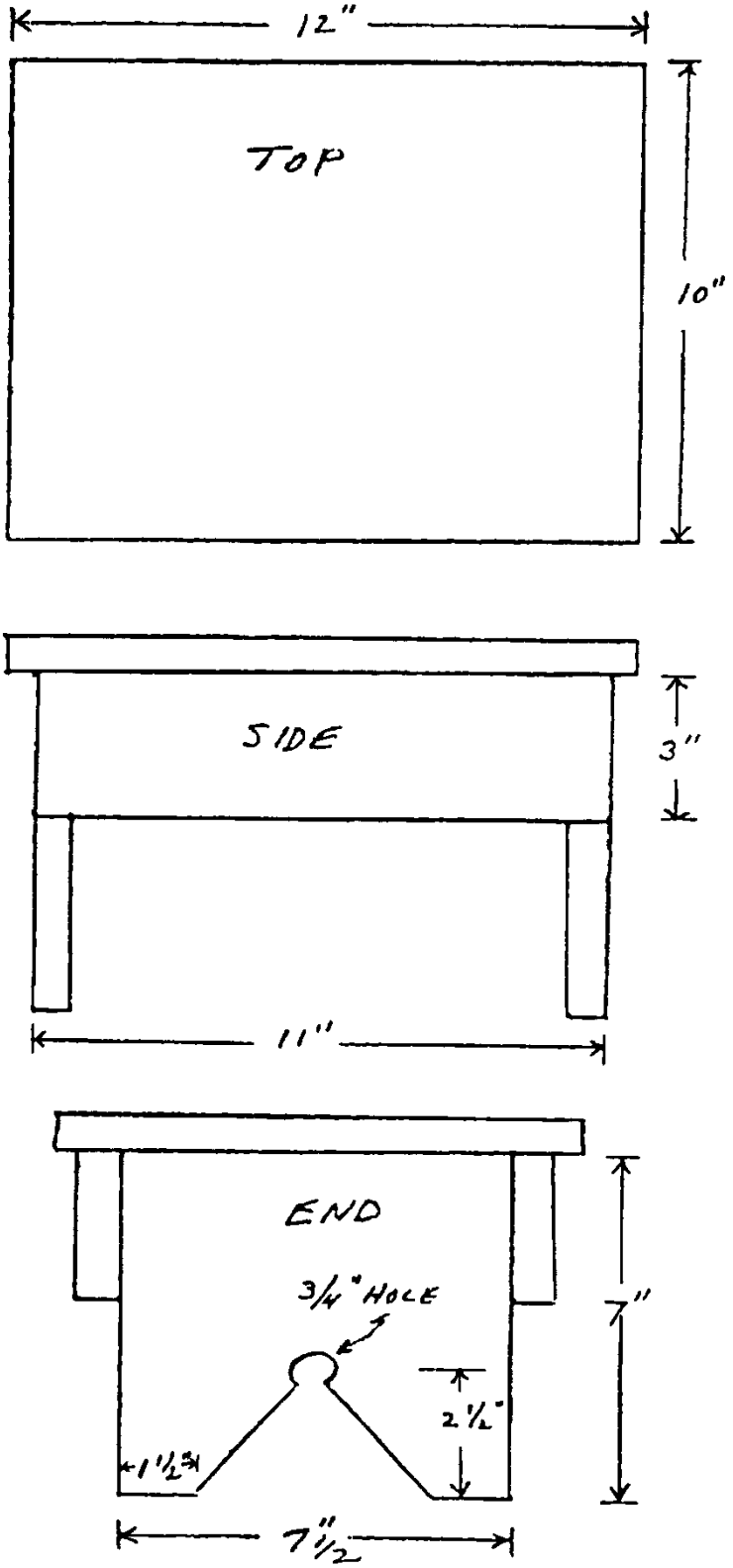

1840 - 1848 PERIOD STOOL

STOOL BOX

BOX STOOL

SUTTER'S FORT
STATE HISTORIC PARK

BOX STOOL

MATERIAL - 3/4" PINE
o = Approx. Nail Position

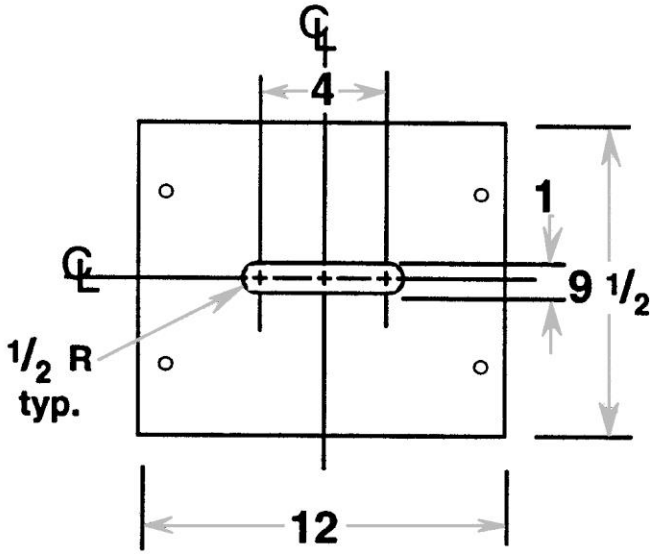

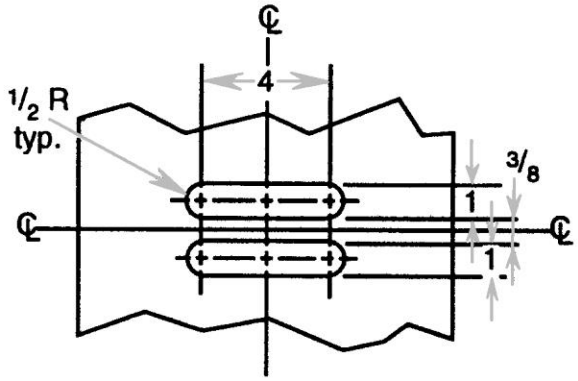

ALTERNATIVE HANDLE DESIGN

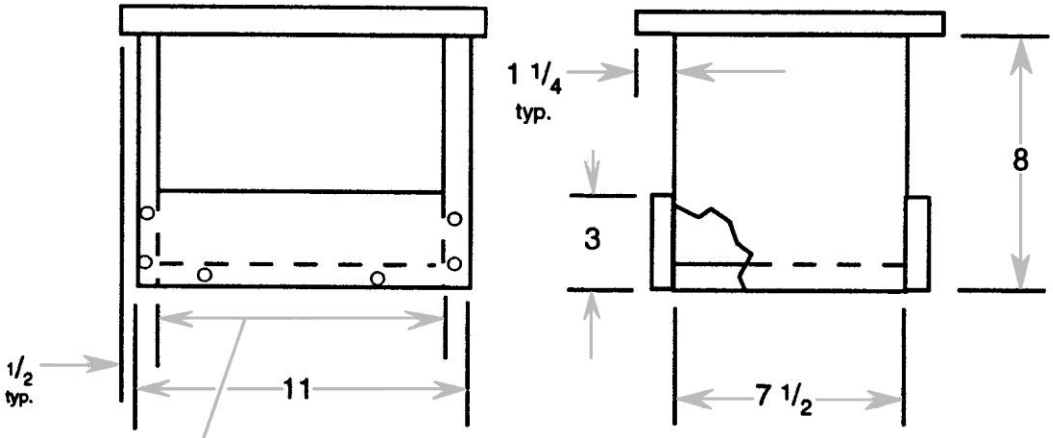

BOTTOM LENGTH IS 11 LESS TWICE THE THICKNESS OF THE END BOARD

- **Stilts (S, D, P, A, X)**

MATERIAL LIST FOR 36 PR. STILTS

QUAN	DESCRIPTION
18	2x4x12' DOUG FIR WITHOUT KNOTS
2	2x4x10' " "
72	1/4x4" STOVE BOLT
72	1/4 HEX NUTS
72	1/4" WASHERS
	WOOD GLUE
1	HAND SAW (AT FORT)
2	HAND BRACES (AT FORT)
2	5/16 DRILL BITS
2	OLD LOOKING WRENCHES TO TIGHTEN NUTS
2	HAMMERS (AT FORT)
2	OLD SPIKES OR SCREWDRIVERS (FOR STAMPING INITIALY
2	WOOD PLANES (AT FORT)

PRE FORT PREPARATION

1. RIP 12' 2x4'S IN HALF & CROSSCUT NOTCH AT CENTER OF 2x2 1/2 WAY THROUGH.

2. CUT 10' 2x4'S INTO 6" LONG SECTIONS.
3. CUT 6" SECTIONS DIAGONALLY

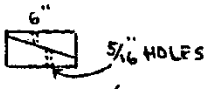

4. PRE DRILL 5/16" HOLES IN 6" DIAGONAL SECTIONS (MAKE SURE 4" BOLT WILL PENETRATE BOTH PIECES OF WOOD
5. TAPE 2x2'S IN BUNDLES TO KEEP FROM WARPING

FABRICATION PROCEDURE

1. HAVE CHILD FINISH CROSSCUT ON 2x2
2. DRILL HOLE IN 2x2 AT DESIRED ELEVATION
3. PUT GLUE (FROM OLD JAR) ON STEP & 2x2
4. BOLT TOGETHER & TIGHTEN
5. STAMP INITIALS INTO EACH STILT
6. ROUND CORNERS AT GRIP LEVEL WITH HAND PLANE
7. GIVE EACH CHILD INSTRUCTIONS ON CORRECT USE OF STILTS & HELP THEM WALK ON THEIR STILTS

C. Project Planning

No matter which project is selected, the following rules and hints will assist you in making this experience more enjoyable for everyone.

- Practice using the tools before coming to the Fort. This may be done by prefabricating some of the pieces of the in the classroom prior to coming to the Fort on your ELP day, or if time is short, really REALLY short, then the parent team may have to make the pieces off site. Most of the more complicated projects can only be assembled at the Fort given the traditional allocated time of 40 to 45 minutes per rotation.
- Contact your local builders supply, wood supply yard, new construction site, cabinet shop, or a parent in the trades. See if your source will donate (tax deduction) or sell at a discount your wood supplies. Recycling or waste wood sources are another option.
- Cut/square nails need to be purchased either through the Fort Trade Store (sold at cost with no markup) or directly from Tremont Nail Company, or one of the few hardware stores that resell Tremont nails. NOTE: Round/wire nails are not period and will increase the possibility of wood splitting. DO NOT USE HORSE SHOE NAILS, They will always split the wood unless special pocket holes are drilled (WAY too much extra work, oh yes, I forgot to tell you that those nails will not hold well in wood either. When used to hold horseshoes in place, the nails are driven through the horse's hooves and then bent over.)
- Organize the parent teams - minimum of two parents at this station at all times, double the number if more than one class from the school is attending. One parent leads the children through the project assembly, and the other parent functions as the site safety person and interfaces with the visiting public. The parents should swap places/functions after each rotation. A third parent (a rover) could spell the safety parent should a break be needed.
- Should an emergency occur, immediately contact Sutter's Fort staff.
- The more planning and pre-event work that can be done before you come to the Fort, the more enjoyable the experience will be for everyone. Remember, the time you spend in the Fort is supposed to be fun for everyone!
- Inventory the tools in the tool chest (if you need to use them) at the start and end of the event. Report to the Park staff about any broken or dull tools.

Below is information from the Tremont Nail Company:
http://www.tremontnail.com/

Tremon Nail Company History

Established 1819. Nail makers for over 180 years.

The Nail Mill

The main mill building was constructed in the early 1800's and was named after the fulling mill (Parker Mills) whose foundation it now shares. The mill was rebuilt in 1848 after a fire destroyed part of the structure. Until the 1920's the main source of power was a centrifugal water wheel which powered the massive overhead shafting. The beams and trusses mostly wooden pegged are a study in strength and rigidity for which the ship-carpenters who designed and built them would have been justly proud today.

The bell in the cupola bears a date of 1851 and has called to work and to rest over six generations of loyal workers. Since 1819 Tremont Nail Company has survived the tests of time. Loyalty, determination, fortitude and ingenuity have once again succeeded in preserving this early American industry. It is truly a living museum.

Tremont Nail Company History

Nails in their crudest form date back to 3000 B.C. The Romans hand-forged them and they have been found in excavations and sunken ships from the period 500 A.D.

When our ancestors first stepped from the Mayflower onto that soil that was to become Plymouth County, they discovered a soil which was essentially sandy and difficult to cultivate. As they plowed for their fist crops, they noticed that the earth yielded small deposits of crude iron ore mixed with the ooze of the swampy regions. From this ore and with crude smelters, they separated the metal from the ore and began the fashioning of nails and metal tools they had left behind then when they sailed into the unknown.

Cooking utensils, shipfitters hardware, nails and wagon treads grew from this ore dug ir the swamps where the cranberries grow today. As the Massachusetts Bay Colony grew, the residents of Wareham were able to supply newcomers with nails for their homes. The nail industry had been born.

The original factory was established by Issac and Jared Pratt in 1819 on the site of an old cotton mill which had been shelled and burned by the British in the War of 1812. Known originally as Parker Mills Nail Company, it later became known as the Tremont Nail Company. The first cut nail machines appeared during the late 1700's and the first machine to cut and head a nail in one operation was invented by Ezekiel Reed of Bridgewater, Mass.

The present nail factory has about 60 nail machines and was completed in 1848. Among those who managed the business in the early days are men whose names are famous throughout New England: John Avery Parker, William Rodman, Charles W. Morgan, Bartlett Murdock, Benjamin Fearing, William Caswell, Horace Pratt Tobey and William A. Leonard.

For almost 200 years, the company has achieved a reputation for skilled nail cutting that has made its product readily saleable throughout the markets of the world. Through all the changes and the hurried pace of modern industry the same product is still being produced for customers who prefer the superior holding power anc durability of this time-tested nail.

Contact Us:

Tremont Steel Cut Nails

Time tested for over 180 years. As America's oldest nail manufacturer, we are in a position to offer the older patterns of cut nails appropriate to the period of restoration being undertaken. In addition to a variety of styles of nails, we can provide information to help the restorer in determining authenticity in the project.

Cut nails possess great durability. They are hard to pull out because the wood fibers are pushed downward and wedge against the nails, thus greatly reducing loosening. Once your customers have used them, they will prefer them for all kinds of work.

Click on any of the products listed below for details.

Boat Hot-Dip Galvanized

Flooring Hot-Dip Galvanized

Flooring Hardened

Masonry Hardened

Decorative Wrought Head Hot-Dip Galvanized

Common Hot-Dip Galvanized

Common Standard

Shingle Standard

Shingle Hot-Dip Galvanized

Common - Rosehead Standard

Common - Rosehead Hot-Dip Galvanized

Box Hot-Dip Galvanized

Box Standard

Fire Door Clinch Standard

Fine Finish Standard

Brad Standard

Cut Spike Standard

Boat Standard

Fine Cut Headless Brad Standard

Hinge Standard

Clout Standard

Sheathing Standard

Slating Standard

Common Siding Hot-Dip Galvanized

Foundry Standard

Cut Spike Hot-Dip Galvanized

Fire Door Clinch Hot-Dip

Frequently Asked Nail Questions

Q. How long has your company been in business?

A. Tremont Nail Company opened it's doors in 1819 on the same site we use here today. The company changed hands a few times more by the end of the century. In 1927 Tremont Nail was purchased by James S. Kenyon, Sr. and remained until 1989 when it was purchased by W.H. Maze Co. of Peru, IL who sold it to Acorn Manufacturing Co. Mansfield, MA in 2006

Q. What is the most popular flooring nail?

A. The most popular nails for flooring are the Decorative Wrought Head, Common Standard, Common Rosehead and Fire Door Clinch. Any of these nails will hold equally well, so your choice is for the style you prefer.

Q. What nails can I countersink in my flooring?

A. If you are counter-sinking your nails the best to use is the Common Standard. You can also sink the Common Rosehead and Masonry nails. For other uses, the Box nail, Headless Brad, Flooring, and Fine Finish nails can also be counter-sunk.

Q. Why do people choose the Decorative Wrought Head for flooring?

A. The Decorative Wrought Head nail is great to achieve the antique Colonial look. Although, some prefer to use it on the walls because the head protrudes from the floorboards. The nail can be set into the wood, but it is a time consuming process and detracts from the hand-hammered look of the nail.

Q. Why should I use galvanized nails outdoors?

A. Although nails that have been galvanized have a brighter silver shade to them, they are recommended for outdoor projects because they do not rust. Standard nails will rust and can cause streaking of the wood. There are instances, however, where a project called for that authentic streaking look, and the nails were slightly rusted prior to application to speed up the process.

Q. How many nails will I need for my job?

A. The general rule of thumb is 3lbs per 100 square feet of flooring based 16" on center. For a more accurate estimate please call our customer service department at 1-800-835-0121.

Q. Why are my boards splitting?

A. There could be several reasons for splitting. Check to see that you are lining up the long side of your nail with the grain of the wood. If you nail against the grain your nail is acting as a wedge to split the wood. If your nail is longer than 1 1/2", you may want to drill a small pilot hole to help ease the nail into the board. If you find that the pilot hole is not large enough, widen it to the thickness at just below the center of the shank and try again.

Q. What is the recommended spacing for face-nailing floors?

A. If your boards are wide, remember that even if decorative these nails will prevent cupping and bowing when used right. Any board 8" wide or less can be nailed two across. From 8" to 12" should have at least three nails across. Any larger board should have no more than three inches between the nails. All nails should be at least one inch from any edge of the board. If you are nailing less frequently than 16" on center, consider using more rather than fewer across the board.

Q. Do you have tours?

A. Unfortunately, OSHA and our insurance carrier do not allow us to give tours of our factory. All the original buildings are in tact and can be viewed from the outside. We encourage visitors to wander the grounds and visit the river that runs along our factory.

Q. What does "penny" size mean?

SUTTER'S FORT
STATE HISTORIC PARK

Steel Cut Nail Sample Set

Sample Set

Steel Cut Nail Sample Set

This sample set mounted on card stock contains 20 varieties of Tremont Cut Nails as well as a history of nail making and other descriptive material. The set can be wall mounted for quick reference. Ideal for the home craftsman or history buff.

Stock #: TN50
Price: $21.58

add to cart

Nail Type Display Board

Nail Display Board

Nail Display Board

This is the wooden display board version of our popular sample set containing the 20 varieties of Tremont Cut Nails. Each nail is mounted in an individual slot and can be removed for viewing and inspection. The birch laminate display board also contains the complete narrative of the history of cut nails in America.

Stock #: TN60
Weight: 12 lbs.
Price: $73.54

add to cart

MOST IMPORTANT: Get the Students Totally involved and have them "PLAN THE WORK then WORK THE PLAN."

ENJOY! –
Stephen C. Prey, Shop Master, Sutter's Fort Carpenter Shop.

CALIFORNIA STATE PARKS