State of California – The Resources Agency
DEPARTMENT OF PARKS AND RECREATION

REQUEST FOR PROPOSALS

TWO HISTORIC-STYLE SPECIALTY RETAIL CONCESSIONS

CASA DE WRIGHTINGTON

SESSIONS BUILDING

OLD TOWN SAN DIEGO STATE HISTORIC PARK
SAN DIEGO, CALIFORNIA

REQUEST FOR PROPOSALS

FOR

TWO HISTORIC-STYLE SPECIALTY RETAIL CONCESSIONS

LOCATED WITHIN OLD TOWN SAN DIEGO STATE HISTORIC PARK

MAY 19, 2008

JULY 15, 2008

STATE OF CALIFORNIA – RESOURCES AGENCY
DEPARTMENT OF PARKS AND RECREATION
CONCESSIONS AND RESERVATIONS DIVISION
1416 NINTH STREET, 14TH FLOOR
SACRAMENTO, CA 95814

NOTICE OF REQUEST FOR PROPOSALS

Notice is hereby given that the California Department of Parks and Recreation is accepting proposals for two separate contracts to develop, operate, and maintain historic-style specialty retail concessions at the Casa de Wrightington and the Sessions Building located within Old Town San Diego State Historic Park.

Building	Minimum Rental Bid	Historic Period	Approximate Building Size	Facility Improvement Requirement Component
Casa de Wrightington	$42,000 per year or 9% of gross receipts, whichever is greater	Transitional Period 1846 -1856	986 sq. feet, L-shaped building space	Yes
Sessions	$42,000 per year or 10% of gross receipts, whichever is greater	American Period 1856-1872	1,700 sq. feet building space	Yes

Each contract will be awarded separately. To be considered for one of these concession opportunities, you must submit a proposal (and all required copies) in accordance with the terms of the Request for Proposals. If you propose for more than one contract but wish to be awarded only one contract, you may decline all but one contract without forfeiture of your Proposal Bond.

A summary of the proposal submission terms is presented below:

General Proposal Terms	
Proposal Closing Time & Date:	2:00 p.m., July 15, 2008
Proposal Submission Location: Alternative Submission Location:	San Diego Coast District 4477 Pacific Hwy, San Diego, CA 92110 Concessions, Reservations, & Fees Division 1416 Ninth St, #1051, Sacramento, CA 95814
Contract Term:	Ten (10) years
Proposal Bond (due at time of proposal submission):	Five thousand dollars ($5,000)
Proposer's Minimum Years of Relevant Experience:	Two (2) years
Optional Pre-Proposal Meeting:	9:00 a.m., May 29, 2008, Old Town San Diego State Historic Park, McCoy House, located at 2870 Congress Street, San Diego, CA 92113

For more information or to purchase a copy of the complete RFP, contact Donna Renner at San Diego Coast District, (619) 688-3343 or visit the Web site at www.parks.ca.gov/concessions

_____

Ruth G. Coleman, Director

TABLE OF CONTENTS

NOTICE OF REQUEST FOR PROPOSALS I

SECTION 1 - PROJECT SUMMARY 1
1.1 GOAL & OBJECTIVES 1
Department Mission 1
Park Mission 1
Vision for Interpretation 1
Goal of this Request for Proposals (RFP) 1
Objectives of this RFP 1
1.2 GENERAL INFORMATION 1
Site Description 1
1.3 CONTRACT SUMMARY 4

SECTION 2 - THE RFP PROCESS 7
2.1 PROPOSAL PROCESS 7
Tentative Proposal Dates 7
Optional Pre-Proposal Meeting 7
RFP Content Questions 7
Proposal Bond 8
Proposal Submission 8
Proposal Format & Content 8
Submitting Multiple Proposals 9
Confidentiality of Proposals 9
Withdrawal of Proposals 9
2.2 EVALUATION PROCESS 9
Verification of Proposal Information 9
State's Right to Reject Proposals, Waive Defects and Requirements 10
Supplemental Information 10
Proposal Evaluation 10
Contract Award Board 10
Contract Award 10
Protest of Award 10
2.3 CONTRACT EXECUTION 11
Preparation of Contract 11
Performance Bond and Insurance 11
Failure to Sign/Deliver Contract 12

SECTION 3 - THE PROPOSAL 13
3.1 INSTRUCTIONS FOR THE CONCESSION PROPOSAL 13
I. PROPOSER INFORMATION 13
II. PROPOSAL INFORMATION 15
III. PROPOSAL SUMMARY 22
IV. CERTIFICATION OF PROPOSER INFORMATION 22
V. PRIVACY NOTICE 22
3.2 PROPOSAL EVALUATION CRITERIA 23
3.3 PROPOSAL EVALUATION SHEET 25
3.4 CONCESSION PROPOSAL, DPR 398 27

SAMPLE CONCESSION CONTRACTS 70

SECTION 1 - PROJECT SUMMARY

1.1 GOAL & OBJECTIVES

Department Mission
The mission of the California Department of Parks and Recreation is to provide for the health, inspiration, and education of the people of California by helping to preserve the state's extraordinary biological diversity, protecting its most valued natural and cultural resources, and creating opportunities for high-quality outdoor recreation.

Park Mission
The mission of Old Town San Diego State Historic Park is to present the opportunity to experience the history of early San Diego by providing a connection to the past.

Vision for Interpretation
Old Town San Diego transports visitors back to an ever-changing, mid-1800's frontier settlement, to experience and enjoy its sights, sounds, and smells, and to witness its evolution from a Mexican *pueblo* to an American settlement.

Goal of this Request for Proposals (RFP)
The goal of this RFP is to award two (2) concession contracts to individuals or business entities to develop, operate, and maintain historic-style specialty retail concessions that capture and convey the historical, cultural, ethnic, and geographic themes of the buildings' interpretive periods.

Objectives of this RFP
- Create and present through physical facilities, interior furnishings, merchandise, and operational style and format, an attractive environment that captures and conveys the historical, cultural, ethnic, and geographic themes of the buildings' interpretive periods;
- Improve the concession premises, including upgrading the premises so they are in full compliance with the Americans with Disabilities Act;
- Enhance the visitors' experience by providing high-quality goods and services at reasonable prices;
- Provide reasonable financial compensation to the State.

1.2 GENERAL INFORMATION

Site Description
Old Town San Diego State Historic Park (OTSD), which is listed on the National Register of Historic Places, was established in 1968 to preserve and protect San Diego's history and provide educational opportunities for park visitors. It consists of approximately 12 acres located three miles north of downtown San Diego. OTSD is considered one of the primary tourist destinations in the state with an average annual attendance of 5.6 million, many from out of state.

The park's period of historical significance ("Interpretive Period") encompasses three distinct periods within one era: the Mexican Period of 1821-1846, the Transitional Period of 1846-1856, and the American Period of 1856 -1872, and as well as the

California Indian presence in all three periods. Concessionaires assist the Department in recreating these periods through the operation of businesses that are historically accurate to the period of interpretation for the concession facility.

Within OTSD are five historic adobe buildings from the 19th century, two historic masonry buildings from the 20th century, historic museums, and non-historic reconstructed buildings. The park provides a variety of cultural and interpretive offerings including house museums, exhibits, historical displays, and an assortment of concessionaire-operated, historic-style restaurants and retail businesses.

Facility Description

Casa de Wrightington - Specialty Retail Concession

This L-shaped adobe, located at 2769 San Diego Avenue at the corner of Old Beach Road, is approximately 986 square feet. It was originally built circa 1840 as the home of Juana de Dios Machado, who lived in the house, raised children, tended gardens, and ministered to the needs of the poor until the late 1890s. Dr. George McKinstry, Jr., a well-known dentist, had an office and a room in the house. The State reconstructed this Transitional Period (1846-1856) building in 1985.

Concessions appropriate to this facility include, but are not limited to:

Pottery Studio
Plants, Seeds, and Herb Store
Quilting/Sewing Notions
Stationery

Since August 1998 this facility has housed a specialty pottery shop. The gross sales and rent for the last five years as reported by the current concessionaire are as follows:

Fiscal Year	**Gross Receipts**	**Rent to State**
2002/03	$ 523,484	$ 46,376
2003/04	427,701	36,797
2004/05	422,348	37,699
2005/06	373,911	31,464
2006/07	313,681	27,762

Session's Building - Retail Specialty Concession

The Sessions Building, located at 2645 San Diego Avenue, was originally called "Milton P. Sessions Spanish Studio". Noted San Diego architect Richard Requa designed this two-story, Spanish Revival, white stucco building for landscape designer Milton Sessions in 1929. The building is distinctive in that it is one of the few remaining examples in San Diego of an early 20th century 'retail' business designed with Spanish Colonial Revival and Southern California architectural features associated with Richard Requa. The building has retained important character-defining features, such as original full-size, semi-circular windows, wood-frame entrance doors, and wrought-iron balcony on the front façade. In addition, the building has retained much of its original historic fabric, including exterior stucco walls, side stairwell, interior plaster-lath walls, and the angled wood-rafters and crossbeams on the first floor ceiling. The building has been nominated for placement on the California Register of Historical Resources. See Primary Record attached and marked as **Attachment 1 – RFP**.

Sessions used the property as a plant and ceramic shop, office, landscape construction site, and nursery until he relocated his business to La Jolla in 1942. Although the building was built during the twentieth century, it has been designated for interpretation within the American Period (1856-1872).

Concessions appropriate to this facility include, but are not limited to:
Candle and Oils Store
Nursery and Garden Store
Glass Store
Timepieces (Clocks and Watches)
Historic Photo Studio
Historic Photographs/Art Gallery
Rugs and Carpets
Cut Flowers, Floral Design
Hardware

Most recently, this building has operated as a specialty candle shop. The gross sales and rent for the last five years as reported by the current concessionaire is as follows:

Fiscal Year	**Gross Receipts**	**Rent to State**
2002/03	$ 373,579	$ 52,301
2003/04	343,036	48,025
2004/05	330,293	46,242
2005/06	317,328	44,426
2006/07	297,916	41,709

NOTE: The proceeding is for general information only; the State does not guarantee its accuracy. It is recommended that proposers personally investigate the premises and park environs.

Concessions not appropriate to these facilities and which will not be considered are:

Chinese Retail Imports
General Store/Provisions
Leather Goods
Gem and Minerals Store
Candy Store
Tin Wares
Silversmith
Pewter Store
Carpenter/Toymaker
Coffee/Tea/Spices

1.3 CONTRACT SUMMARY

Two different contracts are available for bid through this RFP. Each contract provides for the operation of a historic-style specialty retail concession at a different location under different operating requirements.

It is critical that proposers be familiar with and fully understand all the terms and conditions of each Sample Concession Contract (included herein). Your proposal should be based on the requirements of the contract for which you are bidding in its entirety. If a proposer is awarded the contract, the successful proposer has 30 days to review and sign the awarded contract. The successful proposer shall be expected to accept the provisions of the Sample Concession Contract as written. If necessary, minor clarifications, approved by staff counsel, the Department of General Services, and the Attorney General, may be made prior to contract execution. The intent of the contract is to provide the public with high-quality, reasonably priced goods and services in an authentic manner and atmosphere that enhances the visitor's experience and the educational, natural, and cultural resources of the park. The term of each contract is for a period of ten (10) years.

Summary descriptions of some of the important contract provisions are described below.

At a minimum, the successful proposer will be required to:

1. Develop, equip, operate, maintain and promote a historic-style specialty retail concession at Casa de Wrightington or at the Session's Building that meets the goals of this RFP and complies with the requirements of the Sample Concession Contract for that location. The specialty store shall be furnished and landscaped appropriate to the period and in accordance with the State's guidelines.

2. Pay as annual rent the amount presented in the proposal, which, at a minimum, shall be:
   - For Casa de Wrightington: the greater of forty two thousand dollars ($42,000) annually or nine percent (9%) of Gross Sales.
   - For Session's Building: the greater of forty-two thousand dollars ($42,000) annually or ten percent (10%) of Gross Sales.

3. Provide an Operations Plan, Facility Plan, and Interpretive Plan as specified in Proposal Instructions that clearly demonstrates the proposer's plan to provide fully accessible services and facilities that comply with ADA guidelines. The Plans will become part of the contract subject to State review and approval.

4. At a minimum, the business shall be open seven days a week as follows:
   - ❑ October through May Sunday through Thursday, 10 a.m. until 6 p.m., Friday and Saturday 10 a.m. until 7 pm.
   - ❑ June through September, 10 a.m. until 7 p.m., Monday through Thursday and 10 a.m. until 8 p.m. Friday through Sunday;
   - ❑ Except for the last Thursday in November, December 25th and January 1st at which time the concession may close.

5. Have all concessionaire employees when in public view be attired in Period Appropriate clothing.

6. Offer period-appropriate merchandise that contributes to an understanding of Old Town's history and to a living history environment.

7. Maintain, construct and install period-style signs at Concessionaire's own expense according to the *Guidelines for Signs* and as approved by the State, in accordance with the Interpretive Plan provided in number 3 above.

8. Maintain and care for state-owned artifacts and furnishings in accordance with department guidelines and policies as applicable.

9. Maintain the premises in a good, safe and sanitary condition in accordance with all standards set forth in paragraph "20" and Exhibits I of the sample contract. All housekeeping and maintenance shall be at Concessionaire's own cost and expense.

10. Provide a continuing Performance Bond in the amount of one year's Minimum Annual Rent as bid and adjusted per CPI increase(s).

11. Pay for all taxes applicable to the operation of the concession, including possessory interest taxes, and all utility services as required by the contract.

12. Provide liability, workers' compensation and fire insurance as required by the contract.

13. Obtain all necessary licenses, permits, and approvals as set forth in the contract and abide by all applicable health, safety, and environmental codes and regulations.

14. Comply with the letter and spirit of current and subsequent guidelines or plans, including General Plan amendments or updates, management and interpretive plans, historic structure reports, and others.

15. Participate in and regularly attend meetings of the Old Town San Diego business community and Old Town San Diego State Historic Park concessionaires.

16. Participate in State-sponsored focus groups, community forums, and public meetings to address issues that affect the park and business community at large.

17. Train staff to respond to visitor inquiries about the history of the park and to the facilities located nearby.

18. Demonstrate compliance with labor laws as specified in the RFP.

19. Develop and promote an accessible environment for visitors.

The successful proposer will not:

1. Provide or sell items or services considered inappropriate, deemed objectionable, or denied by the State.

2. Charge prices in excess of those approved by the State.

3. Promote or participate in activities that are incompatible with the rules, regulations, guidelines, or the mission of the Department.

Note: This contract summary is for general information only. Terms and conditions are set forth in detail in the Sample Concession Contract.

SECTION 2 - THE RFP PROCESS

2.1 PROPOSAL PROCESS

Tentative Proposal Dates

May 19, 2008 .....Opening Date - Publication of the RFP

May 29, 2008 .....Optional Pre-Proposal Meeting

June 12, 2008 .....Questions - Last date for proposers to submit written questions

June 26, 2008 .....Answers - DPR written responses to questions

July 15, 2008.....Closing Date - Deadline for proposal submission

August, 2008.....Investigation and evaluation of Proposals

September, 2008.....Notification of "Intent to Award Contract"

September/October 2008.....Award, preparation, and execution of contract

January 2009 .....Ten (10) year contract begins

Note: This schedule does not consider unforeseen factors that could impact the timing of the project. It is the intent of the State to keep proposers apprised of changes in the schedule as they occur. Should the award of the contract be protested, additional time will be required to resolve the matter.

Optional Pre-Proposal Meeting
It is strongly recommended that you or your designated representative attend the optional pre-proposal meeting at 9:00 a.m. on May 29, 2008 at Old Town San Diego State Historic Park, McCoy House, located at 2870 Congress Street, San Diego, CA 92113. The meeting provides an equitable forum for all proposers to:

- Meet local Department staff;
- Learn about the RFP process, including procedures for questions and answers, proposal submission, and contract award;
- Inspect the concession site and receive information on the park and facility history and Department plans for the park and the concession;
- Review the RFP document.

RFP Content Questions
Questions regarding this RFP must be submitted in writing and received no later than 5:00 p.m. June 12, 2008**.** To ensure fair competition in which all proposers receive the same information and materials, no telephone or personal inquiries about this RFP will be answered. Questions should be submitted in writing to the Department by mail or fax at the address and phone numbers listed below. A written compilation of all questions and answers, and any RFP addenda, will be sent by first-class mail to all identified potential proposers. Questions will be answered as clearly and completely as possible without jeopardizing the competitiveness of the proposals.

Proposers should send their questions addressed to:

California Department of Parks and Recreation
San Diego Coast District
4477 Pacific Highway
San Diego, California 92110
Attn: Donna Renner
Fax: (619) 688-3229
drenner@parks.ca.gov

Proposal Bond

Proposals must be accompanied by a Proposal Bond or cashier's check payable to the State of California, Department of Parks and Recreation, in the amount of five thousand dollars ($5,000). Only one proposal bond is required when submitting multiple proposals. By submitting a proposal bond the proposer agrees that the bond or cashier's check may be cashed and retained by the State upon proposer's failure to execute the contract once awarded and/or proposer's failure to comply with the start-up terms of the contract once awarded. Further, by submitting a proposal, proposer agrees that the State will suffer costs and damages not contemplated otherwise should proposer be awarded the contract but fail to execute and proceed with the contract, the exact amount of which will be difficult to ascertain. Accordingly, it is agreed that such retained sums shall not be deemed a penalty, but, in lieu of actual damages, shall represent a fair and reasonable estimate of damages to the State for failure of the proposer to execute and proceed with the contract upon notification of award by the State. Bonds will be returned to all proposers once a contract is fully executed.

Proposal Submission

Your proposal, including the Proposal Bond, must be received by 2:00 p.m. on July 15, 2008 at:

California State Parks
San Diego Coast District
4477 Pacific Highway
San Diego, CA 92110

Or

California State Parks
Concessions, Reservations, and Fees Division
1416 Ninth Street, #1051
Sacramento, CA 95814

Proposal Format & Content

The proposal package must be sealed and clearly marked on the outside with "Proposal for Historic-Style Specialty Concession at Old Town San Diego State Historic Park – Casa de Wrightington" or "Proposal for Historic-Style Specialty Concession at Old Town San Diego State Historic Park – Sessions Building". Failure to identify the park location of the contract for which you are proposing may cause your proposal to be disqualified. Please submit an original plus **six (6)** copies of your proposal in 8.5" x 11" three-ring binders. All material should be presented in an 8.5" x 11" portrait format with tabs for

each section. Larger formatted graphic exhibits are acceptable if folded to fit within the 8.5" x 11" three-ring binder.

Submitting Multiple Proposals
Each of the two contracts will be awarded and executed separately. Proposers interested in receiving multiple contracts should submit a separate proposal (including an original and six (6) copies of for each proposal) for each concession contract. **Only one proposal bond is required when submitting multiple proposals.** If you are selected as a "Best Responsible Bidder" for more than one contract but wish to accept only one contract, you may withdraw your proposal from consideration for the contract of your choice without penalty or forfeiture of your Proposal Bond. However, if you fail to execute the remaining contract, your Proposal Bond may be retained by the State in accordance with the terms and conditions provided herein.

Confidentiality of Proposals
All proposals submitted in response to an RFP become the property of the State and are subject to the requirements of the California Public Records Act (California Government Code Section 6250 et seq.). The proposer must identify in writing all copyrighted material, trade secrets, or other proprietary information the proposer claims are exempt from disclosure under the Public Records Act. Proposers claiming exemption must include the following statement in their proposal:

> *The proposer agrees to indemnify and hold harmless the State, its officers, employees, and agents from any claims, liability, or damages against the State, and to defend any action brought against the State for Proposer's refusal to disclose such material, trade secrets, or other proprietary information to any party.*

Failure of a proposer to include this statement and/or identify in writing the claimed exempt material shall be deemed a waiver of any exemption from disclosure under the Public Records Act. Requests to review proposal submissions will not be allowed until after an "Intent to Award Contract" notice is published by the State.

Withdrawal of Proposals
Proposals may be withdrawn at any time prior to the proposal closing date and time provided that a written request executed by the proposer or his/her duly authorized representative for the withdrawal of such proposal is filed with the Department. The withdrawal of a proposal shall not prejudice the right of a proposer to file a new proposal prior to the proposal closing date and time. However, once the proposal closing date and time has past, proposals shall be irrevocable.

2.2 EVALUATION PROCESS

Verification of Proposal Information
The State will obtain credit reports and verify tax form information to further establish the qualifications of any proposer. All proposers may be subject to a personal interview and inspection of his/her business premises prior to award. Proposers should notify bank and business references in writing that a representative from the state will be

contacting them concerning the financial and credit information furnished to the Department with the proposal.

State's Right to Reject Proposals, Waive Defects and Requirements
The State reserves the right to accept or reject any or all proposals, and waive any or all immaterial defects, irregularities, or requirements in the RFP for the benefit of the State, so long as such waiver does not give any proposer a material advantage over other proposers. A proposer shall not be relieved of his/her proposal nor shall any change be made in his/her proposal due to a proposer error.

Supplemental Information
At its sole discretion, the State reserves the right, but does not have the obligation, to seek supplementary information or clarification from any proposer at any time between the dates of proposal submission/acceptance and the contract award. The State may obtain credit reports and/or make background inquiries to further establish the qualifications of any proposer. Any proposer may be subject to personal interview and inspection of his/her business premises prior to award. Any proposer may be required to appear before the Concession Contract Award Board.

Proposal Evaluation
All proposals received shall be evaluated for form and content in accordance with the requirements of this RFP. The Contract Award Board will evaluate and score each eligible proposal pursuant to the point system and selection criteria as described in the Proposal Instructions and Proposal Evaluation Form. **Proposals not containing all of the items in the Concession Proposal form (DPR 398) may be rejected.**

Contract Award Board
Concession Contract Award Boards are appointed by the Director of the Department, or his or her representative, and convened to review, evaluate, and rate each proposal received and make a recommendation to the Director regarding the selection of the "Best Responsible Proposer". The Award Board for this contract may include park staff with related expertise, such as Field Division Chief, Deputy Director, Park Design and Construction staff, or District Superintendent, and representatives from other public agencies and the private sector.

Contract Award
If an award is made, the award for a concession contract will be to the "Best Responsible Proposer" in accordance with Section 5080.23 of the Public Resources Code. The "Best Responsible Proposer" will be the bidder whose proposal passes each of the required elements and receives the highest total score as determined by the Contract Award Board and approved by the Director. Execution of the awarded concession contract is subject to approval by controlling agencies of the State, which include the Department of General Services and the Attorney General, and will not be binding on the State or the successful proposer until such approval is obtained.

Protest of Award
Based on Title 14, California Code of Regulations, Chapter 3, Section 4400 and Department policy, other than a contract negotiated under Section 5080.16 of the Public Resources Code, when a concession in excess of two years is proposed to be let at

public bid (or RFP), any proposer protesting or objecting to the same, or desiring to protest or object, may file within ten days of the awarding of the contract (publication of the “Notice of Intent to Award”) with the Director of the Department his/her verified petition, setting forth his/her objections, the reasons therefore, and points and authorities in support thereof. Failure to file a verified petition within the ten-day period shall constitute a waiver of the right to protest. Protests must be sent to:

Director
California Department of Parks and Recreation
P O Box 942896
Sacramento, California 94296-0001
Fax: 916-657-3903

A copy of such petition also must be served upon the Attorney General within such ten-day period by the protesting entity. Serve the Attorney General at:

California Department of Justice
Office of the Attorney General
Natural Resources Law Section
1300 I Street, 11th Floor
Sacramento, California 95814
Fax: 916-327-2319

At the time of filing said petition, the protestor may demand in writing a hearing thereon. If a hearing is so demanded, or if the Director on his/her own motion orders a hearing, proceedings shall be taken under the Administrative Procedure Act, and the said petition shall be treated as a statement of issues. Any recommendation or proposed decision of the hearing officer shall be submitted to the Director for approval, adoption, modification, disapproval, or other interlocutory or final action thereon by the Director. If a hearing is not so demanded or ordered, the action of the Director on said petition shall be final.

2.3 CONTRACT EXECUTION

Preparation of Contract

Subsequent to the award of a contract, if an award is made, the State will prepare a final contract for execution. The contract will contain "exhibits" developed from the selected proposal including the proposal’s Operation, Facility, and Interpretation Plans, as required. Minor changes or modifications to the contract, proposal plans, and contract exhibits may be made prior to execution based on agreement between the State and concessionaire. However, no material change to the contract or its exhibits as presented in the RFP and in the selected proposal may be made.

Performance Bond and Insurance

The successful proposer will be required to submit a Performance Bond and evidence of insurance required under the contract. Failure to submit the bond and/or insurance verification within the time limit presented may be treated as a refusal to execute, if the State so elects. The State may take the Proposer Bond and select the next Best Responsible Proposal.

Failure to Sign/Deliver Contract
A failure of the successful proposer to sign and deliver the contract within thirty (30) days of receipt may be treated as a refusal to execute, if the State so elects. The State may retain the Proposer Bond and select the next Best Responsible Proposal.

SECTION 3 - THE PROPOSAL

3.1 INSTRUCTIONS FOR THE CONCESSION PROPOSAL

A completed Concession Proposal form (also known as DPR 398) and a Proposal Bond will constitute your proposal. You must complete all sections, respond to all questions, and fill in all blanks of the form. Inapplicable questions or blanks must be marked "N/A" or "Not Applicable". Failure to properly complete the form may disqualify your proposal.

The proposal must be clear, unambiguous, and unconditional. It should clearly commit you to entering into a contract with the State to provide the services and other concession improvements as required by this RFP and offered in the proposal.

The submission of a proposal shall be deemed evidence that you are fully aware of the responsibilities of being a concessionaire and have carefully examined State laws relating to California State Park concessions; possessory interest tax as related to concessions; the site(s) selected for said concession; obligations and responsibilities related to local control agencies and permitting requirements; and the proposal instructions, proposal form, and the sample concession contract included herein.

I. PROPOSER INFORMATION

A. Proposer Identification

Incumbent Factor

The incumbent concessionaire is defined as the individual, partnership, or corporation that currently operates the concession advertised in this RFP. Such concession operation must be at the same site, comprise the same type of operation(s), and provide substantially the same types of products and services as those specified in the RFP. Incumbent proposals are awarded points based on annual Performance Evaluations (DPR 531) performed by the State. Poor Performance Evaluations may result in negative point scores.

Small Business Status

Preference will be granted to proposers properly certified as Small Businesses as defined in Title 2, Section 1896, et seq., California Code of Regulations. If you want to claim this preference, include a copy of the Small Business Certification with your proposal. Omission of the Certificate or Office of Small Business (OSB) identification number may delay awarding of preference points. A complete and certifiable application must be on file with the OSB by 5:00 p.m. on the proposal closing day. To ensure a certifiable document, applications should be submitted well before the proposal closing day. It is the proposer's responsibility to contact OSB to verify the completeness of the application. Incomplete documents are not certifiable. You may obtain an application for Small Business Certification from:

Office of Small Business and DVBE Certification
707 Third Street, 1st Floor, Room 400
West Sacramento, CA 95605
(800) 559-5529 or (916) 375-4940
FAX (916) 374-4950

Certification will verify that the business is independently owned and operated; not dominant in its field of operation; has its principal office located in California; has officers domiciled in California; and together with affiliates is either a service, construction, or non-manufacturer with 100 or fewer employees and average annual gross receipts of ten million dollars ($10,000,000) or less over the previous three (3) years, or a manufacturer with 100 or fewer employees.

B. Business Information

Select the type of business that describes the proposing entity (Sole Proprietorship, Partnership, Joint Venture, Limited Liability Companies (LLC) or Corporation) and provide the requested information. The type of business must be established prior to submitting a proposal and must not be a condition of receiving the contract. Limited Liability Companies (LLC) must include a copy of their Articles of Organization with the California Secretary of State seal (LLC-1 or LLC-5) and the Statement of Information (LLC-12) to identify the managing member or members of the Organization.

C. Individual Information

Each individual, partner, member of joint ventures, officer of corporations, concession manager, and holders of 25% or more of the company's shares (as applicable) must complete a copy of the Individual Information form AND complete and sign the Authorization to Release Information in Section IV.

Experience

Provide a narrative describing in detail the duration, extent, and quality of your education and business experience with special emphasis on your experience related to the subject concession. Be specific with respect to the type and dates of experience, your role in the management and specific duties, type and size of operation, quality of operation, public agency involvement, contractual relationships, and other factors that demonstrate your ability to successfully operate the proposed concession. Be sure to demonstrate how you meet the required proposer qualifications, if applicable. Attach additional information as needed.

For the purposes of this RFP, proposers must have a minimum of two (2) years experience owning, managing, or operating a business of similar size, type, and scope as the concession operations set forth and envisioned by this RFP. The proposer will be rated according to the years of relevant experience as verified by references. In addition, points are awarded for experience contracting with public agencies.

D. Statement of Financial Capability

Proposers must present evidence satisfactory to the State demonstrating their ability to finance, construct, operate, and maintain the concession facilities as proposed. For the purposes of this RFP, proposers must have the ability to unconditionally access a minimum of CapitalOutlay. Your statement of financial capability must include the source of funding and detailed information including:

Source of funding and cost of concession development: Identify and describe the specific source of funding that your business will use to undertake the project as you have proposed. If funds are to be used from outside sources (i.e., parent company, third party, LLC partners, etc.), provide documentation, such as a recent bank

statement, balance sheet, income statement, and/or other supporting documents, to demonstrate these funds are available and unconditionally committed to this concession project. In addition, if funds are to be borrowed to finance any portion of the total investment, you must provide loan commitment documentation such as a letter-of-intent from the individual, bank, or other lending entity indicating the minimum amount to be loaned and any applicable percentage rate. The loan commitment may contain the qualification that the loan will be consummated only upon award of an agreement with the State, otherwise the commitment must be irrevocable and unconditional.

Business Financial Statement: Use the Business Financial Statement to describe the current and true condition of your business' assets, liabilities, and net worth. Round figures to the nearest dollar. If your business is a partnership or joint venture, each general partner or joint venturer must individually submit a Business Financial Statement. You may provide copies of forms filed with the Internal Revenue Service, where applicable.

E. Credit Worthiness

Proposers must present evidence of credit worthiness. At a minimum, evidence shall include a credit report issued by a nationally recognized credit bureau within 60 days of the proposal due date. Any derogatory information listed on said reports must be explained.

F. References

Financial, client, and vendor references are used to confirm information provided by proposers and to evaluate the proposer's quality of experience and past performance. Please submit one reference for each reference type required below. However, to adequately substantiate the claims you have made in your proposal, you are encouraged to provide three references that are familiar with you and your business. Proposers should notify their references in writing that a representative from the State will be contacting them.

For the purposes of this RFP, please provide the references from the following sources:

- Financial References: Include your bank or savings and loan institution.
- Client or Business References: Name clients or other persons that most accurately reflect your performance and ability to fulfill contract obligations with other entities for the provision of goods and services.
- Vendor References: Please provide vendor references if you are a pre-existing business currently utilizing vendors.

II. PROPOSAL INFORMATION

Provide an Operation, Facility, and Interpretive Plans that addresses each of the checked Items in the Concession Proposal form (DPR 398). For your information, each element of the Concession Proposal is described below. You may submit additional information to fully describe and enhance your proposal.

A. Operations Plan

As a condition of the contract award, the successful proposer may be required to revise or further develop the Operation Plan to the satisfaction of the State and prior to the

execution of the contract. If and when it is accepted, the final plan will be incorporated as an exhibit to the contract and become an obligation of the concessionaire there under. In addition to the Operations Plan, the successful proposer also must adhere to the operational requirements as described in the contract. Your Operation Plan should address each of the following:

Vision/Mission Statement

Your Vision/Mission Statement should capture both the State's and your own goals and objectives for the concession business and provide a clear philosophy to guide you.

Organizational Structure

Provide an organization chart and staffing plan that can guide the operation and ongoing management of your concession business. Your plan should identify and define all job classifications to be used and the required job skills and qualifications. Describe the assignments, duties, and schedules for each staffing level considering contract requirements, the proposed hours of operation (see Sample Concession Contract), and any unique seasonal and peak use circumstances.

Transition/Business Start-Up

Describe your plan and timeline for starting concession operation and providing a seamless transition in customer service.

Customer Service

Demonstrate your ability and clear commitment to successfully implement an effective customer service program. Your plan should include, but is not limited to, previously established and effective customer service program models, adequate employee staffing and management oversight, hours of operation equal to or greater than required by this RFP, and a customer satisfaction feedback survey program.

Employee Staffing and Training

Your employee policies and training program should include, but are not limited to, personnel policies; hiring practices; health, safety, and grievance policies and procedures; uniform policies and requirements; business orientation; job training; and park orientation training which is to include a strong emphasis on the history of Old Town; and visitor accessibility training. Such programs must provide sufficient staffing with the skills, capabilities, and training to ensure the provision of uninterrupted, high-quality services to all park visitors.

Marketing and Advertising

Your marketing plan, which includes but is not limited to advertising and interpretive activities in the park, must clearly describe approaches, methodologies, media, advertising materials, schedules, and budget allocations in order to attract visitors to the park unit. At a minimum, proposers shall identify and commit a percentage of their gross receipts exclusively for marketing, advertising, and promoting interpretive activities in the park. Higher points will be awarded to those proposals that include marketing, advertising, and promotional samples, sources, and commit a reasonable amount of profits toward this effort.

Community Involvement
Provide a plan for and commitment to creating added value and benefits to the surrounding community and park visitors. This plan may include special events, educational programs, and community service activities. In addition, you should identify the special skills, knowledge, and resources needed and available to implement your plan.

Products, Merchandise, and Services
Provide a detailed description of the proposed merchandise and services to be provided by the concession operation. Sales items must be high quality and the selection varied. The products and services offered should meet or exceed the needs of the park users and be compatible with and complementary to the mission of the park.

Prices and Pricing Policies
Provide a price schedule for a representative sample of the products and services proposed. Your plan must include a definitive description and explanation of the policies to be used to establish prices for products and services. The policies shall clearly demonstrate the relationship of pricing to product quality and quantities. Implementation of these policies must provide park visitors with quality products at reasonable prices considering the competition of comparable markets for similar products and services.

Conservation and Recycling
Outline your approach to solid waste management, including reduction, re-use, and recycling, use of post-consumer recycled products, water and energy conservation, pest management, hazardous materials handling, air quality, and other applicable facets of resource conservation and environmental protection that are applicable to the concession operation. Your plan should clearly commit you to a program that will minimize negative impacts on the environment and encourage park visitors to do the same.

Accessibility
Provide a plan for and commitment to ensuring disabled visitors will have access to all of the services provided through the concession operation in accordance with the American's with Disabilities Act of 1990, the Rehabilitation Act of 1973, and California Government Code Sections 4450 et. seq. and 7250. Accessibility should address all disabilities and should not be limited to those affecting mobility. Please refer to the Department's Access to Parks Guidelines, available online at www.parks.ca.gov/concessions, for more information about providing accessible park facilities.

B. Facility Plan

After the State's review and approval, the Facility Plan from the successful proposal shall be included as an exhibit to the contract. In addition to the Facility Plan, the successful proposer also must adhere to the facility requirements as described in the contract.

Please note the following when developing the Facility Plan: Old Town San Diego State Historic Park is listed in the National Register of Historic Places and the Sessions Building has been nominated to be placed on the California Register of Historical Resources. Therefore, the Facility Plan, including all facility improvements, for both the

Casa de Wrightington and the Sessions Building shall be developed and completed in accordance with *The Secretary of the Interior's Standards for the Treatment of Historic Properties (The Standards) and The Secretary of the Interior's Guidelines for Preserving, Rehabilitating, Restoring, and Reconstructing Historic Buildings (The Guidelines). Additionally, all sub-surface work must be examined by a State approved archeological consultant at the proposer's expense prior to work being done.*

Furnishings

Describe the intended physical facilities of the concession including furnishings, equipment, décor, and layout. Implementation of proposer's plan should provide first-class concession facilities that are consistent with and will enhance park values, visitor services, and visitor experiences at the park and must be appropriate to the interpretive period represented by the building you are proposing for your business. In preparing your proposal, please consider color palates, floor and window treatments, landscaping, and signage.

Facility Improvement

Describe your plans for the facility improvements incremental to those required by the RFP. Include the resumes of the proposed architects, archeological consultant(s) and contractors to be used and descriptions and/or schematic drawings of the work to be accomplished and items to be installed. You may submit lists, drawings, pictures, and diagrams to illustrate and clarify your plans.

Listed below are the minimum facility improvements that are required for each building.

For Casa de Wrightington:

- Treat building for termites and repair any damage. This may including tenting of the building which would include adjacent San Diego House,
- Re-level interior and exterior tile/brick flooring the ADA specifications of no more than ¼" of space between the tile/bricks in areas as necessary,
- Replace all recessed and track lighting fixtures and replace with tin chandelier style ceiling light fixtures (see page 182 of the Old San Diego Retailer's Reference Guide), and wall sconce fixtures,
- Build and install a period appropriate front counter as specified in the Old San Diego Retailer's Reference Guide; which as part of this facility improvement shall become the property of the State upon the termination of the contract. It is the State's expectation that any counters, casework, furnishings, etc., will be antiques or constructed per the Retailer's Reference Guide to ensure the integrity of the historical time period.
- Keep area around fire place clear so visitors understand this was an actual home.
- Eliminate painted flowers on the front window panes.
- Replace all leaking water lines to irrigation system and all master irrigation control valves. Test drip irrigation system for proper operation and repair as needed,
- Trim and cut back yucca plants on north side of building by approximately 60%,
- Remove the three low-wattage halogen light fixtures on the front façade (underneath the eaves) of this building. The two fixtures installed on the wing, underneath the eaves may remain,

- Design and build an accessible 48 inch wide walking path constructed from compacted decomposed granite from the existing walking path in the rear of the building along the north side to the front of the building which will allow ADA access to the upper level of the building from the rear of the space. Archeological investigations/monitoring, design and construction plans, including materials used, are subject to State approval prior to work being done. The path shall meet the requirements for "Exterior Route of Travel" (ERT) as described in Section 32 which is attached and marked as **Attachment 2 – RFP**.
- Camouflage air-conditioning equipment at the rear of this building with lattice or crate style wood box allowing for unit to breath, design and construction, including materials used, are subject to State approval prior to work being done.
- As part of this improvement, design a sign at the top of the stairs communicating the alternative access to the merchandise on the bottom floor.

For Sessions Building:

- Improve air flow of existing HVAC unit by enlarging opening of return air vent/grate and increasing the number of supply vents,
- Remove and eliminate electrical ceiling fans,
- Remove and replace interior ceiling light fixtures with approved, period fixtures,
- Remove and replace the non-period interior sconce light fixtures,
- Tent building for termites extermination, repair any damaged members,
- Re-stain interior open-beam ceiling to match existing color in retail area,
- Replace interior wood flooring in 1st floor retail space,
- Build and install a period appropriate front counter as specified in the Old San Diego Retailer's Reference Guide; which as part of this facility improvement shall become the property of the State upon the termination of the contract. It is the State's expectation that any counters, casework, furnishings, etc., will be antiques or constructed per the Retailer's Reference Guide to ensure the integrity of the historical time period.
- Build and install at least two large display counters with corresponding case work as specified in the Old San Diego Retailer's Reference Guide; which as part of this facility improvement shall become the property of the State upon the termination of the contract.
- Craft and install period wooden hand rail on interior stairway to second floor,
- Restore historic concrete and flagstone stoop at rear entrance of building,
- Replace water heater,
- Secure upstairs restroom to ensure non-operational, preserving integrity of the building,
- Repair exterior stucco siding as needed and paint to match existing,
- Inspect roof for leaks, dry rot and termite damage. Repair as needed including any sub roofing material and replace and properly secure any roof tiles,
- Replace rotten wood hardscape in front of main entrance of building with either stabilized decomposed granite or inlay brick,
- Replace the exterior lighting fixtures with approved period fixtures,
- Remove lettering on windows, as it is not period correct, do not cover the windows with the backs of display cases or anything else.

Implementation
Describe your plan, method, and commitment to meeting the Facility Plan. Specify the timeline for completion of any capital improvements and installation of said décor and equipment prior to the commencement of operations.

Cost Estimates
Provide a cost breakdown for the Furnishings Plan and/or Capital Improvement Plan.

C. Interpretive Plan

Interpretation is a critical part of a concession and, consequently, can be very influential in the selection of the successful proposal. The Interpretive Plan from the successful proposal, after the State's review and approval, shall be included as an exhibit to the contract. The State reserves the right to include or exclude any item or items in the Interpretive Plan that the State determines do not meet the intent of the RFP or the mission of the park and the Department. In addition to preparing the Interpretive Plan, the successful proposer also will be required to implement it as described in the contract.

A list of general interpretive considerations is provided as these are interpretive contributions that we will consider in the evaluation process, annual inspections and annual performance ratings. These are some of the general interpretive considerations that can significantly affect the look, feel, and ambiance of the interpretive period:

- ❑ Exterior lighting
- ❑ Signage
- ❑ Hangtags (product)
- ❑ Displays and Casework
- ❑ Counters
- ❑ Wood coverings over cash register and other modern intrusions
- ❑ Brown paper and twine for packing product
- ❑ Paint hues and type (i.e. milk paint)
- ❑ Correct floor coverings
- ❑ Consideration of type of window treatments
- ❑ Period print advertising
- ❑ Appropriate/period product line(s)
- ❑ Eliminate plastic, cardboard, pressboard, Styrofoam (and other modern packaging)
- ❑ Period exterior surfaces, walkways, sides of buildings (repairs should always attempt to reconstruct what may have been historically accurate).
- ❑ Product labels
- ❑ Staff period attire
- ❑ Period style seating
- ❑ Period demonstrations/activities/events
- ❑ Interpretive panels and information

A reference list is provided herein to aid in the development of the Interpretive Plan and further support the list above and marked as **Attachment 3 - RFP**.

Proposer's Relevant Experience
Describe your experience, knowledge, skills, and abilities to develop and operate an interpretive program.

Business' Interpretive Theme
Describe the interpretive theme of your business including the specific years to be interpreted ("interpretive period").

Interpretive Programs and Activities
Describe your plans for interpretive programs and activities. Interpretive activities should be conducted on a regular basis, integrating concession activities with the historic daily duties of a shopkeeper of the interpretive period.

Diversity
Describe your plan to develop, operate, or provide an interpretive program for multi-ethnic, multi-generational visitors.

Business' Ambiance
Describe your plan to develop and implement historical ambiance including such things as historic characterizations, environment, period attire, furnishings, signs, wall treatment, advertising, window coverings, equipment, tools, display shelves, counters, tables, chairs, and period-style merchandise.

Primary Education
Describe your plan to provide an educational experience to school age (K-8) children.

D. Rental Offer

The concessionaire will be required to pay as annual rent a guaranteed amount (Rental Guarantee) or a Percentage of Gross Sales, whichever is greater. Proposers shall bid both the Rental Guarantee and the Percentage of Gross Sales as specified in the Concession Proposal form (DPR 398) and as follows:

Location	Guaranteed Annual Rent	Percent Rent
Casa de Wrightington	$42,000	9% of gross receipts
Session's Building	$42,000	10% of gross receipts

E. Concession Feasibility

Document your ability to successfully initiate the proposed concession in a financially responsible manner, in accordance with the terms and conditions of the sample contract and your Operation, Facility, and Interpretive Plans (as applicable). This information must substantiate your ability to: develop, furnish, equip, operate and maintain the concession in a high-quality manner; provide the public with quality products and services at reasonable and competitive prices; pay the State the rental offered; and provide a reasonable return on your investment. Fiscal documentation that will be considered in awarding points includes a financial pro forma; statement of assets and liabilities; business, vendor, bank, and/or financial references; and similar documents.

You may provide information in addition to that required in the Concession Proposal form (DPR 398), but do not alter the format in any way. You must respond to each item in the order listed with the information requested or N/A.

III. PROPOSAL SUMMARY

The Proposal Summary should summarize your relevant experience, knowledge, and expertise, and your Operation, Facility, and Interpretive Plans (as applicable) in 250 words or less.

IV. CERTIFICATION OF PROPOSER INFORMATION

F. Labor Law Compliance Certification

A request may be made to the National Labor Relations Board for information regarding Administrating Hearing decisions against each proposer. You must have no more than one final, unappealable finding of contempt of court by a federal court issued for violation of the National Labor Relations Act within the two-year period immediately preceding the closing date of this RFP or your proposal will be disqualified.

G. Proposer Certification

A completed certification is required with your proposal or it will be disqualified.

H. Authorization to Release Information

A signed authorization for each individual, partner, member of joint ventures, officer of corporations, Concession Manager, and holders of 25% or more of the company's shares (as applicable) must be included or the proposal will be disqualified.

V. PRIVACY NOTICE

This section provides notice to proposers. No action by proposers is necessary.

3.2 PROPOSAL EVALUATION CRITERIA

Incumbent Preference **5 Points**

Incumbent proposals are awarded points based on annual Performance Evaluations (See DPR 531 in the Sample Concession Contract) performed by the State as follows:

Overall Rating of Evaluation	Number of Years Rating Was Received	Points Awarded
"Excellent"	3 out of last 3 years	5 points
"Excellent" with no "needs improvement" or "unsatisfactory"	2 out of last 3 years	3 points
"Excellent" with no "needs improvement" or "unsatisfactory"	1 out of last 3 years	2 points
Satisfactory	3 out of last 3 years	1 point
"needs improvement" or "unsatisfactory"	1 out of last 3 years	- 1 point
"needs improvement" or "unsatisfactory"	2 out of last 3 years	- 3 points
"needs improvement" or "unsatisfactory"	3 out of last 3 years	- 5 points

Small Business Preference **5 Points**

Five points will be awarded to those proposers who have a complete and certifiable application on file with the Office of Small Business Certification.

Experience **10 Points**

For the purposes of this RFP, proposers must have a minimum of five (5) years experience owning, managing, or operating a business of similar size, type, and scope as the concession operations set forth and envisioned by this RFP. The proposer will be rated according to the years of relevant experience as verified by references and the quality of experience as it relates to the business described in this RFP. In addition, points are awarded for experience contracting with public agencies.

Operation Plan **20 Points**

Points will be awarded based upon the degree to which the proposal addresses each of the required items of the Operation Plan (as identified in the DPR 398, Concession Proposal) and demonstrates an understanding of and commitment to achieving the objectives of this RFP. In addition, points will be awarded based upon the proposer's demonstrated ability to implement the components of the Plan. More points will be awarded to proposals that provide high-quality goods and services that are consistent with the intent of the RFP and the mission of the park.

Facility Plan **15 Points**

Points will be awarded based upon the degree to which the proposal addresses each of the required components of the Facility Plan (as identified in the DPR 398, Concession Proposal) and meets and exceeds the objectives of this RFP. More points will be awarded to proposals that provide high-quality and fully accessible facilities.

Interpretive Plan **20 Points**

Points will be awarded based upon the degree to which the proposal demonstrates an understanding of the park's interpretive purposes and contributes to the overall interpretive messages of the park. More points will be awarded to proposals that integrate the park's interpretive theme into the daily operation of the concession.

Rental Offer **25 Points**

For the purpose of assigning points in the Proposal Evaluation, the highest acceptable* rental offer for each category of rent required (Rental Guarantee and Percentages of Gross Sales) will be assigned the maximum points available for that category. Each lower rental offer will be assigned points in relation to the highest rental offer as follows:

Rental Guarantee (Minimum bid is GuaranteedRent)

$$\frac{\text{(Bid Amount) minus (GuaranteedRent)}}{\text{(Highest Bid Amount) minus (GuaranteedRent)}} \times 10 \text{ points} = _____ \text{ points}$$

Percentage of Gross Sales (Minimum bid is PercentageRent1)

$$\frac{\text{(Bid Amount)}}{\text{(Highest Bid Amount)}} \times 15 \text{ points} = _____ \text{ points}$$

*Note: the highest bids received may not be considered acceptable. Proposers may be required to prove to the satisfaction of the State their ability to operate a successful business under their rental offer. Failure to prove this ability will be cause to disqualify the proposal. In this case, the second highest acceptable bid would be used to calculate points awarded.

3.3 PROPOSAL EVALUATION SHEET

LEVEL I COMPLIANCE WITH RFP REQUIREMENTS

PROPOSER QUESTIONNAIRE

I. PROPOSER INFORMATION

A.	Proposer Identification	_____ (pass/disqualify)
B.	Business Information	_____ (pass/disqualify)
C.	Individual Information	_____ (pass/disqualify)
D.	Statement of Financial Capability	_____ (pass/disqualify)
E.	Credit Worthiness	_____ (pass/disqualify)
F.	Financial/Business/Vendor References	_____ (pass/disqualify)

II. PROPOSAL INFORMATION

A.	Operation Plan	_____ (pass/disqualify)
B.	Facility Plan	_____ (pass/disqualify)
C.	Interpretive Plan	_____ (pass/disqualify)
D.	Rental Offer	_____ (pass/disqualify)
E.	Concession Feasibility	_____ (pass/disqualify)

III. PROPOSAL SUMMARY _____ (pass/disqualify)

IV. CERTIFICATION AND AUTHORIZATION

A.	Labor Law Compliance Certification	_____ (pass/disqualify)
B.	Proposer Certification	_____ (pass/disqualify)
C.	Authorization to Release Information	_____ (pass/disqualify)

PROPOSER BOND _____ (pass/disqualify)

Proposer must pass LEVEL I to qualify for further consideration.

LEVEL II RENT PROPOSED/CREDIT WORTHINESS & ABILITY TO FINANCE

A. Rent Proposed Met/Exceeded Minimum Requirement _____ (pass/disqualified)

B. Ability to Finance _____ (pass/disqualified)

C. Credit Worthiness _____ (pass/disqualified)

D. Compliance with National Labor Relations Act _____ (pass/disqualified)

Proposer must pass LEVEL II to qualify for further consideration.

LEVEL III PROPOSAL EVALUATION

A. Proposer Information

Incumbent Preference	_____	/ 5 Points
Small Business Preference	_____	/ 5 Points
Experience and Capability/Quality of Experience	_____	/ 10Points

B. Proposal Information

Operation Plan	_____	/ 20 Points
Facility Plan	_____	/ 15 Points
Interpretive Plan	_____	/ 20 Points
Rental Offer	_____	/ 25 Points
Concession Feasibility	_____	/ Passa/Fail*
GRAND TOTAL	_____	**/ 100 Points**

Comments:

Board Member:_____ Date: _____

*** A "fail" rating in this category disqualifies the proposal.**

3.4 CONCESSION PROPOSAL, DPR 398

State of California - The Resources Agency
DEPARTMENT OF PARKS AND RECREATION

CONCESSION PROPOSAL

Two Historic-Style Specialty Retail Concession

This Concession Proposal is submitted for the following Concession Contract:
(Please check the concession contract for which you are proposing. Choose only one. A separate Concession Proposal form must be submitted to bid on each contract.)

☐ **Casa de Wrightington**

☐ **Sessions Building**

The Proposer Questionnaire consists of the following sections:

I. PROPOSER INFORMATION
   A. Proposer Identification
   B. Business Information
   C. Individual Information
   D. Statement Of Financial Capability
   E. Credit Worthiness
   F. Financial/Business/Vendor References

II. PROPOSAL INFORMATION
   A. Operation Element
   B. Facility Element
   C. Interpretive Element
   D. Rental Offer
   E. Concession Feasibility

III. PROPOSAL SUMMARY

IV. CERTIFICATION AND AUTHORIZATION
   A. Labor Law Compliance Certification
   B. Proposer Certification
   C. Authorization to Release Information

V. PRIVACY NOTICE

A. PROPOSER IDENTIFICATION

GENERAL INFORMATION

BUSINESS NAME _____
(Exactly as it is to appear on the Concession Contract)

ADDRESS _____

CITY/STATE/ZIP CODE _____

PHONE NUMBER _____ FAX NUMBER _____

EMAIL ADDRESS _____

CONCESSION'S MANAGER _____

SMALL BUSINESS: ☐ No ☐ Yes S/B #: _____

FEDERAL ID NUMBER: _____

CONTACT PERSON

NAME _____

ADDRESS _____

CITY/STATE/ZIP CODE _____

PHONE NUMBER _____ FAX NUMBER _____

EMAIL ADDRESS _____

B. BUSINESS INFORMATION

Check the one box below that describes your type of business and complete/attach the associated information requested. Also attach an organization chart if appropriate.

☐ **SOLE PROPRIETORSHIP**

☐ **PARTNERSHIP:** Attach a complete copy of the Partnership Agreement. To qualify as a responsive proposer, the Partnership Agreement shall be executed and binding upon each of the parties.

1. Date partnership established _____
2. Is the Partnership Agreement recorded? ☐ Yes. Date _____ Where_____ ☐ No
3. Has the partnership done business in California? ☐ Yes. Dates_____ ☐ No
4. PARTNER NAMES ADDRESSES NO. OF SHARES GENERAL (G) or LIMITED (L)

☐ G ☐ L
☐ G ☐ L
☐ G ☐ L

☐ **JOINT VENTURE:** Attach a complete copy of the Joint Venture Statement/Agreement. To qualify as a responsive proposal, the Joint Venture Statement/Agreement shall be executed and binding upon each of the parties.

1. Date joint venture established _____
2. Is the Joint Venture Statement/Agreement recorded? ☐ Yes. Date _____ Where _____ ☐ No
3. Has the joint venture done business in California? ☐ Yes. Dates_____ ☐ No
4. JOINT VENTURER NAMES AND SHARE ALLOCATIONS ADDRESSES

List on separate page titled Joint Venture #4.

☐ **LIMITED LIABILITY COMPANY (LLC)**: Attach a copy of Articles of Organization with the California Secretary of State seal and the Statement of Information, identifying the managing member(s) of the Organization. To qualify as a responsive proposer, the LLC shall be in good standing and qualified to do business in the State of California.

1. Date LLC was established _____
2. Is the company authorized to do business in California? ☐ Yes ☐ No
3. Has the LLC done business in California? ☐ Yes. Dates_____ ☐ No
4. LLC MANAGING MEMBERS NAMES AND SHARE ALLOCATIONS ADDRESSES

☐ **CORPORATION:** Attach a Corporate Resolution indicating the officers authorized to contract on behalf of corporation. The Corporate Resolution shall contain the corporate seal and be certified by the Secretary of the corporation. To qualify as a responsive proposer, the corporation shall be in good standing and qualified to do business in the State of California.

1. Date incorporated _____
2. Place incorporated _____
3. Is the corporation authorized to do business in California? ☐ Yes ☐ No
5. How is the corporation held? ☐ Publicly. Below, explain how and where stock is traded. ☐ Privately
6. For publicly held corporations, attach a copy of the most current Annual Report.

B. PROPOSER BACKGROUND, continued

(CORPORATION - Continued)

7. Complete the information below:

	AUTHORIZED	ISSUED	OUTSTANDING
Number of voting shares			
Number of non-voting shares			
Number of shareholders			

Value per share of common stock: Date_____ Par_____ Book_____ Authorized_____

8. Complete the information below for each officer and director of the corporation, the shareholder who is not a corporation officer or director but owns the largest number of voting shares of corporation stock, and the shareholder who is not a corporation officer or director but owns the largest number of non-voting shares of corporation stock.

NAME	TITLE	ADDRESS	VOTING SHARES	NON-VOTING SHARES

Include attachment marked #8.

9. Has a surety or bonding company ever been required to perform on the default of the corporation within the last ten (10) years?
☐ Yes. Provide the information below for each default. ☐ No *(proceed to item 10)*

Surety/Bonding Company Name _____

Bond Date _____ Bond Amount _____

Explain the circumstances surrounding each default and actions taken by the surety or bonding company.

10. Has the corporation ever been adjudicated bankrupt or involved in pending bankruptcy matters?
☐ Yes. Below, enter dates, court jurisdiction and amounts of liabilities and assets. ☐ No

11. Is the corporation presently a party to any pending litigation, liens or claims?
☐ Yes. Below, enter detailed information for each legal action. ☐ No

12. Is the corporation subject to any outstanding claims, liens, or judgments?
☐ Yes. Below, enter detailed information for each claim, lien or judgment. ☐ No

13. Has the corporation defaulted on, been terminated for non-performance or breach of contract, or voluntarily abandoned or forfeited rights under a contract for services or concessions contract?
☐ Yes. Below, enter an explanation of the circumstances and outcomes of each event. ☐ No

C. INDIVIDUAL INFORMATION

Legal Name _____ Social Security No. _____
Residence Address _____ Phone No. _____
Business Address _____ Phone No. _____

PERSONAL HISTORY

1. Have you, individually, as a partner, joint venturer or as officer of a corporation had a bond or surety canceled or forfeited within the last ten (10) years?
   ☐ Yes. Provide information below. ☐ No *(proceed to item 2)*

   Bond Company Name_____

   Bond Date_____ Bond Amount_____

   Explain the reason for each cancellation or forfeiture.

2. Have you individually, as a partner, joint venturer, or officer of a corporation been convicted of a felony crime in the last 10 years?
   ☐ Yes. Please explain ☐ No

3. Have you or your spouse or any business that you owned or in which you were an officer or had an interest ever declared bankruptcy, been declared insolvent or bankrupt, filed for bankruptcy, or reorganization under Federal or State laws?
   ☐ Yes. Below, enter dates, court jurisdictions, and amounts of liabilities and assets. ☐ No

4. Are you individually or any partnership or joint venture in which you have been party currently involved in any pending litigation? ☐ Yes. Below, enter dates, violations and locations. ☐ No

WORK EXPERIENCE:
Attach a resume and narrative as necessary.

CERTIFICATION: I hereby certify under penalty of perjury that all responses stated above regarding my personal history and work experience are true to the best of my knowledge and belief, and I understand and agree that any misstatement or omission of any material fact may cause forfeiture on my part of all rights to the proposed contract to be awarded by the State of California.

SIGNATURE DATE

▲ _____ _____

D. STATEMENT OF FINANCIAL CAPABILITY

SOURCE OF FUNDING AND COST OF CONCESSION DEVELOPMENT

(Attach additional pages as necessary.)

BUSINESS FINANCIAL STATEMENT

For: _____ As of: _____
(Business Name) *(Date)*

ASSETS

Current Assets

CASH ON HAND IN BANK	_____	
ACCOUNTS RECEIVABLE:		
Current	_____	
Over 30 Days	_____	
Over 60 Days	_____	
NOTES RECEIVABLE DUE WITHIN 1 YEAR	_____	
MERCHANDISE INVENTORY: Cost/Market	_____	
OTHER CURRENT ASSETS:		
_____	_____	
_____	_____	
Total Current Assets		_____

Long Term Assets

NOTES RECEIVABLE DUE AFTER 1 YEAR	_____	
LAND AND BUILDINGS (at cost)	_____	
<Less> Reserve For Depreciation	_____	
FIXTURES AND EQUIPMENT (at cost)	_____	
<Less> Reserve For Depreciation	_____	
PREPAID EXPENSES/DEFERRED CHANGES	_____	
OTHER LONG TERM ASSETS:		
_____	_____	
_____	_____	
Total Long Term Assets		_____
*** TOTAL ASSETS ***		_____

(BUSINESS FINANCIAL STATEMENT- Continued)

LIABILITIES

Current Liabilities

ACCOUNTS PAYABLE (past due) _____

ACCOUNTS PAYABLE (current) _____

NOTES PAYABLE DUE WITHIN 1 YEAR:

To Whom	Secured by	

NOTES & ACCOUNTS PAYABLE TO PARTNERS, DIRECTORS, OFFICERS, OR STOCKHOLDERS _____

ACCRUED LIABILITIES (interest, rental, payroll, etc.) _____

ACCRUED FEDERAL & STATE TAXES _____

OTHER CURRENT LIABILITIES:

Total Current Liabilities _____

Long Term Liabilities

NOTES PAYABLE DUE AFTER 1 YEAR:

OTHER LIABILITIES:

Total Long Term Liabilities _____

TOTAL LIABILITIES _____

NET WORTH

CAPITAL STOCK (if corporation) _____

OWNER CAPITAL _____

TOTAL NET WORTH _____

*** TOTAL LIABILITIES & NET WORTH *** _____

E. CREDIT WORTHINESS

Summarize proposer's credit credentials and include a credit report issued by a nationally recognized credit bureau current to within sixty (60) days of the proposal closing date. Attach additional pages as necessary.

II. PROPOSAL INFORMATION

(Attach separate pages as necessary)

A. OPERATIONS ELEMENT

☐ No Operation Plan Required

- [x] Vision/Mission Statement
- [x] Organizational Structure
- [x] Transition/Business Start-up
- [x] Customer Service
- [x] Employee Staffing & Training
- [x] Marketing and Advertising
- [x] Community Involvement
- [x] Products, Merchandise, and Services
- [x] Prices and Pricing Policies
- [x] Conservation and Recycling
- [x] Accessiblity
- [ ] Other: _____
- [ ] Other: _____
- [ ] Other: _____

B. FACILITY ELEMENT

☐ No Facility Plan Required

- [x] Furnishings and Decor
- [x] Facility Improvement
- [ ] Maintenance and Housekeeping
- [ ] Other: _____
- [x] Implementation Schedule
- [x] Cost(s) estimates.
- [ ] Other: _____

C. INTERPRETIVE ELEMENT

☐ No Interpretive Plan Required

- [x] Proposer's Relevant Experience
- [x] Business' Interpretive Theme
- [x] Interpretive Programs and Activies
- [ ] Diversity Outreach
- [ ] Other: _____
- [ ] Other: _____
- [x] Business' Ambiance Plan
- [x] Primary Education
- [ ] Food Service

D. RENTAL OFFER

For Casa de Wrightington

The <u>minimum rental proposal</u> for this concession project is:

Minimum Guaranteed Annual Rent:	Forty Two Thousand Dollars ($42,000)	**AND**
Minimum Percentage of Gross Receipts:	Nine Percent (9%) of Annual Gross Receipts	

YOUR RENTAL PROPOSAL (Casa de Wrightington)

Guaranteed Annual Rent Offer: _____ Dollars ($_____.00)

AND

Percentage Rental Offer: _____ % of Annual Gross Receipts

For Sessions Building

The <u>minimum rental proposal</u> for this concession project is:

Minimum Guaranteed Annual Rent:	Forty Two Thousand Dollars ($42,000)	**AND**
Minimum Percentage of Gross Receipts:	Ten Percent (10%) of Annual Gross Receipts	

YOUR RENTAL PROPOSAL (Sessions Building)

Guaranteed Annual Rent Offer: _____ Dollars ($_____.00)

AND

Percentage Rental Offer: _____ % of Annual Gross Receipts

E. CONCESSION FEASIBILITY

You may provide additional information, but do not alter the formats below in any way. You must respond to each item in the order listed with the information requested or N/A.

CONCESSION DEVELOPMENT COST ESTIMATE

PRELIMINARY PLANNING AND DESIGN	_____	
CONSTRUCTION OF INTERIOR IMPROVEMENTS/FIXTURES	_____	
EQUIPMENT/FURNISHINGS	_____	
AUTOS/TRUCKS	_____	
STOCK/INVENTORY	_____	
LICENSES & PERMITS	_____	
PREPAID EXPENSES	_____	
OTHER COSTS:		
_____	_____	
_____	_____	
_____	_____	
TOTAL DEVELOPMENT COSTS		_____

PROPOSED MEANS TO FINANCE CONCESSION

CONCESSIONAIRE SUPPLIED CAPITAL	_____	
SHORT TERM LOANS (1 year or less)	_____	
LONG TERM LOANS (more than 1 year)	_____	
SUPPLIER CREDIT	_____	
OTHER FINANCING:		
_____	_____	
_____	_____	
_____	_____	
TOTAL FINANCING*		_____

** Must meet or exceed "Total Development Costs" amount.*

FINANCIAL PROFORMA

Complete all aspects of this proforma as they apply to your proposed concession operation. Round figures to the nearest dollar.

ITEM	YEAR 1	YEAR 2	YEAR 3	YEAR 4	YEAR 5
GROSS PROFIT					
Gross Sales					
Total Gross Sales (1)					
<Less> Cost of Goods Sold (2)					
TOTAL GROSS PROFIT					
OPERATING EXPENSES					
Variable Operating Expenses					
Salaries & Payroll Related					
Taxes & Licenses (other than sales income)					
Insurance					
Advertising					
Maintenance & Repairs					
Utilities (including telephone)					
Legal & Accounting					
Rent to State					
Interest					
Supplies & Material					
Admininstrative Overhead					
Travel & Transporation					
Other:					
Other:					
Other:					
Other:					
Total Variable Operating Expenses					
Fixed Operating Expenses					
Facility Improvements					
Equipment Purchases					
Amortization					
Depreciation					
Performance Bond					
Total Fixed Operating Expenses					
TOTAL OPERATING EXPENSES (3)					
*** NET INCOME *** *(before income taxes)*					

(1) EXPLAIN HOW YOU ARRIVED AT THE PROJECTED TOTAL GROSS SALES.

(2) EXPLAIN HOW YOU CALCULATED COST OF GOODS SOLD.

(3) EXPLAIN HOW YOU CALCULATED TOTAL OPERATING EXPENSES

PREPARER SIGNATURE ►	TITLE	DATE
PRINTED NAME	PHONE NUMBER	EMAIL ADDRESS
ADDRESS	CITY/STATE/ZIP CODE	

III. PROPOSAL SUMMARY

(Provide a summary of the proposal and proposer's qualifications with a maximum of 250 words. Attach separate pages as necessary.)

IV. CERTIFICATION AND AUTHORIZATION

A. LABOR LAW COMPLIANCE CERTIFICATION

I hereby certify that:

PROPOSER NAME _____

FEDERAL EMPLOYER ID NUMBER _____

ADDRESS _____

CITY/STATE/ZIP CODE _____

has not had more than one, final, unappealable finding of contempt of court by a federal court issued against the proposer for any violation of National Labor Relations Act provisions within the two-year period immediately preceding the closing date for acceptance of proposals under this Request for Proposals.

Additionally, I, the signatory, do hereby swear that I am duly authorized to legally execute the certification described above on behalf of the proposer. I am fully aware that this certification, executed on the date below, is made under penalty of perjury under the laws of the State of California.

SIGNATURE ▶	DATE
SIGNATORY'S PRINTED NAME	TITLE

B. PROPOSER CERTIFICATION

I/We am (are) personally acquainted with the premises of the subject concession and I/we have read, understand, and agree with the terms and conditions specified in this RFP document, including the Sample Concession Contract.

I/We meet the required experience qualifications and/or currently employ a Concession Manager who meets the qualifications.

I/We have the necessary financial resources to equip and operate the concession and perform the proposed capital investments, and I/we have enclosed a cashier's check or Proposer's Bond in the required amount, payable to the Department of Parks and Recreation, as a guarantee that, in the event my/our proposal is accepted and approved by the State, I/we will:

1. Execute and complete the Concession Contract, incorporating this proposal and all the terms and conditions contained in the RFP. The Concession Contract then will be executed by the State upon approval by the appropriate State agencies;
2. Provide the Performance Bond as required by the Concession Contract upon execution of the Contract by State; and
3. Provide the proposed guarantees, including rent, capital investments, equipment, and management and operation services.

I/We hereby certify that all responses and information provided in connection with this proposal are true to the best of my/our knowledge and belief, and I/we understand and agree that any misstatement or omission of any material fact may cause forteiture on my/our part of all rights to the proposed agreement to be awarded by the State of California.

I/We hereby respectfully submit this proposal, including all required documents and statements. I/We represent that the signatories hold the positions set forth below their signatures and are authorized to execute this proposal.

If the proposal is made by a sole proprietor, this form shall be signed with the full name of the proposer. If it is made by a partnership, a limited partnership, or a joint venture, it shall be signed with the full name of each partner or member thereof. If it is made by a corporation, it shall be signed by: (1) the President, any Vice President, or the Chairman of the Board; and (2) by the Corporation Secretary, any Assistant Secretary, Chief Financial Officer, or any Assistant Treasurer.

SIGNATURE ►	POSITION/TITLE AND/OR FUNCTION	DATE
PRINTED NAME	PHONE NUMBER	FAX NO.
ADDRESS	CITY/STATE/ZIP CODE	
SIGNATURE ►	POSITION/TITLE AND/OR FUNCTION	DATE
PRINTED NAME	PHONE NUMBER	FAX NO.
ADDRESS	CITY/STATE/ZIP CODE	
SIGNATURE ►	POSITION/TITLE AND/OR FUNCTION	DATE
PRINTED NAME	PHONE NUMBER	FAX NO.
ADDRESS	CITY/STATE/ZIP CODE	

State of California - The Resources Agency
DEPARTMENT OF PARKS AND RECREATION

C. AUTHORIZATION TO RELEASE INFORMATION

(General)

To Whom It May Concern:

I/my company have (has) submitted a proposal to the State of California, Department of Parks and Recreation, for a concession operation. I hereby authorize you to release or discuss any or all information in your possession pertaining to me as requested by an employee or representative of the State of California, Department of Parks and Recreation in connection with or to verify information submitted by me in the above-referenced proposal.

PROPOSER SIGNATURE ▶	DATE SIGNED
PRINTED NAME	
POSITION/TITLE	
COMPANY NAME *(if applicable)*	

V. PRIVACY NOTICE

Section 1798.17 of the Civil Code requires this notice be provided when collecting personal information from individuals. Each individual has the right to review his or her personal information maintained by this department unless exempted by law.

OFFICIAL RESPONSIBLE

Chief, Concessions and Reservations
California Department of Parks and Recreation
P.O. Box 942896
Sacramento, CA 94296-0001
(916) 653-7733

AUTHORITY

Public Resources Code Section 5080.08(a) and 5080.08(b)

PURPOSE

The information will be used for the purposes of evaluation to determine capabilities of proposers to perform the contract and to determine the best responsible proposer if an award is made.

PROVIDING INFORMATION

All information requested is mandatory.

EFFECTS OF NOT PROVIDING INFORMATION

If the requested information is not provided, the proposal will be determined to be not responsive and will be rejected.

KNOWN OR FORESEEABLE DISCLOSURES OF INFORMATION PURSUANT TO CIVIL CODE SECTIONS 1798.24, SUBDIVISIONS (e) OR (f)

Disclosure may be made to the Department of General Services, Office of the Attorney General, Department of Finance, Office of the Auditor General, or the Department of Parks and Recreation Audits Office.

Attachment 1 – RFP

Old Town San Diego
Retail Specialty Concessions
Primary Records

State of California - The Resources Agency **Primary #:**
DEPARTMENT OF PARKS AND RECREATION **HRI # :**
PRIMARY RECORD **Trinomial:**
CRHR Status Code: 3CS
Other Listings:
☐ **Update or Supplement** **Review Code:** **Reviewer:** **Date:**

Page 1 **of** 2 ***Resource Name or Number (Assigned by Recorder):** Sessions Nursery Building, Old Town SHP, San Diego, CA

P1. Other Identifier: Facility #667-A-1-10-0-002

***P2. Location:** ☐ **Not for Publication** ☐ **Unrestricted** ***a. County:** San Diego County

***b. USGS 7.5' Quad:** La Jolla, Ca **Date:** 1975 ;**T** ;**R** ; **¼ of** **¼ of Sec.** ; **B.M.**

c. Address: , 2645 San Diego Avenue, **City:** San Diego **Zip:** 92110

d. UTM: (Give more than one for large and/or linear resources) **Zone**: 11 ; POINT A: **mE/** **mN;** POINT B: **mE/** **mN;** POINT C: **mE/** **mN;** POINT D: **mE/**

☐ UTM Coordinates determined with Global Positioning System (GeoExplorer III) data, differentially corrected using base station files
☐ UTM Coordinates determined electronically from computerized map
☐ UTM Coordinates determined from USGS quadrangle map using UTM coordinate grid template

e. Other Locational Data (e.g., parcel #, directions to resource, elevation, etc., when appropriate): Block 453, Lot 2, Old Town San Diego SHP, San Diego, CA .

***P3a. Description (Describe resource and its major elements. Include design, materials, condition, alterations, size, setting, and boundaries)**:

Toby's Candle Shop is a 1 1/2-story rectangular building with masonry-bearing walls. The exterior sheathing is white stucco. It has a split-level, medium-gabled roof covered with cylindrical red clay tile. Designed by the noted San Diego architect Richard Requa, it was built in 1929 for nurseryman Milton Sessions. Sessions used the property as a nursery, ceramic shop, sales office, and landscape construction site from 1929 until about 1941-42; he did not reside in the building. He had a masonry conservatory on the east side with ample wall and roof windows for his plants.

The "Milton P. Sessions Spanish Studio," as the building was originally called, is distinctive in that it is one of the few remaining examples in San Diego of an early 20th-century retail business designed with Spanish Colonial Revival and Southern California architectural features associated with architect Richard Requa. The front of the building on San

Text continued on next page

***P3b. Resource Attributes (List Attributes and Codes):** HP6 (1-3 story commercial bldg.)

***P4. Resources Present:** ☒ **Building** ☐ **Structure** ☐ **Object** ☐ **Site** ☐ **District** ☐ **Element of District** ☐ **Other (Isolates, etc.)**

P5a. Photo or Drawing (Photo required for buildings, structures, and objects.)

P5b. Description of ☒ **Photo** ☐ **Drawing (View, date, accession#)**
View towards southeast; 8/13/2004

***P6. Date Constructed/Age and Sources** ☐ **Prehistoric** ☒ **Historic** ☐ **Both :**
Factual evidence (F): *San Diego Union*, September 15, 1929, announcing the nursery's opening.

***P7. Owner and Address:**
California Department of Parks and Recreation, P.O. Box 942896, Sacramento, CA 94296

***P8. Recorded by (Name, affiliation, address):** Victor Walsh, State of California, Historian II, Department of Parks and Recreation, San Diego Coast District, 4477 Pacific Highway, San Diego, CA 92110

***P3a. cont'd**.

Diego Avenue features three full-size (8.5 ft x 6 ft. 1.7 in.) recessed, semi-circular windows and two single-panel glass, wood-frame doors. The second story has a small, slightly extending wrought-iron balcony with a glass-paned, recessed wooden door. These are original, character-defining features because they help to identify the building's purpose as a retail shop on the first floor and office and reception area on the second floor.

The original stucco straight-approach stairway on the building's northwest side facing Mason Street is in excellent condition. The arched window at the bottom of the stairway is also original, although the glass is presently covered with a water-based white paint, which is reversible. The stairway has six smooth stucco rises. They are original. The two square casement windows above the stairway are also original. The shutters may or may not be original. The Spanish tiled entrance at the foot of the stairs has been replaced with a board walkway. The original Spanish flagstone steps on the stairway have been replaced with wooden, beige-blue planked steps. The entrance at the top of the stairway is flagstone, although not original.

The rear side of the building originally had a wood-slatted balustrade, which has been removed. There are three rectangular casement windows on the lower level, and a small, single-hung square window and two full-size, rectangular pane-glass windows on the upper level. These are not original. According to Requa's construction drawings, the upper rear level had a straight approach stairway (at the

end closest to Mason Street) and two small casement windows similar in design to those on the Mason Street side.

The east side of the building is partly concealed by an outdoor pottery yard. The elongated stucco conservatory has been replaced by a DPR reconstruction of George McKinstry's dental office. It extends out from Toby's Candle Shop. The reconstruction is not historic. McKinstry, who came to Old Town after 1865, never had an office at this location; he lived down the street at the Wrightington adobe. The original arched window on this side remains intact.

The original gabled roof has been altered. It is now split-level in the rear overlooking the porch on the Mason Street side.

The interior 1st-story flooring is wood planking. It covers the original flagstone. The ceiling still has the original dark stained, angled wood-rafters and crossbeams. A wooden stairwell, which is original, with handrail leads to the upstairs mezzanine.

The upstairs mezzanine was Session's reception area and office. It is now a storage area. Plasterboard walls enclose the room. These were added in the late 1970s when the building became the park visitor's center.

In sum, Toby's Candle Shop is in good structural condition. Its Spanish Colonial Revival architectural design and spatial organization of the rooms (on the first floor) remain intact. None of the original dividing walls on the first floor have been altered or repartitioned.

The building has retained important character-defining features, especially the front façade, and much of its historic fabric, including exterior stucco walls, arched windows and stairwell, original plaster-lath walls and flagstone tile (covered with wood planking) on the first floor, and the original dark stained, angled wood-rafters and crossbeams that give the first floor ceiling a defining character.

The original setting has been altered. Large tropical shrubs partially obscure the Mason Street stucco façade, which is easily reversible.

According to the original architectural drawings (March 8, 1929), the building is 30 ft wide on the San Diego Avenue side, 34 ft. wide in the rear, and 42 ft. 6 in. deep on the east and west sides. It measures 1,126 square feet, and sits on a concrete slab. The building does not have a basement or loft.

***P9. Date** ☒ **Recorded** ☐ **Updated:** August 2004

***P10. Type of Study (Describe):** California Register of Historical Resources Nomination

***P11. Report Citation (Cite survey report and other sources, or enter "none."):**
Sources: None

***Attachments:** ☐ **NONE** ☒ **Location Map** ☒ **Sketch Map** ☒ **Continuation Sheet**
☐ **Building, Structure, and Object Record**
☐ **Linear Feature Record** ☐ **Archaeological Record** ☐ **District Record** ☐**Bedrock Grinding Record**
☐ **Rock Art Record** ☐ **Artifact Record** ☐ **Photograph Record** ☐ **Other (List):**

***Resource Name or Number (Assigned by Recorder):**

B1. Historic Name: Sessions Nursery Building, Old Town SHP, San Diego, CA
B2. Common Name: Toby's Candle Shop
B3. Original Use: Plant Nursery, Sales Yard **B4. Present Use:** Retail Candle Shop
***B5. Architectural Style:** Spanish-Colonial Revival
***B6. Construction History (Construction date, alterations, and date of alterations):**

The Sessions Studio was built in 1929 by the well-known San Diego contractor F. E. Young and designed by Richard Requa, one of San Diego's foremost architects, for Milton Sessions, a landscape designer.

Milton Sessions relocated his nursery and floral business to La Jolla (1005 Torrey Pines Rd.) during World War II. According to *Frye & Smith San Diego City Directory*, the property (then listed as 2635 San Diego Ave.) was vacant during 1942. In subsequent years, the property was used as a retail liquor store (1943-1970), a studio apartment (upper level, post-1955), needle yarn shop (1970-1976), park visitor's center (1977-1989?), and candle shop (1990?-present). The building's new uses, especially as an apartment, resulted in a number of interior and exterior alterations

Alterations include:

Exterior

Conservatory

- Removal of the stucco conservatory (see photos 6 & 7) on the east side. According to Requa's drawings at the San Diego Historical Society Research Archives, the original conservatory was 8' 4" high, 20' wide (San Diego Avenue side), 12' 8" wide (opposite side). Extending out from the center of the nursery on the east side, it housed Session's many native desert plants.

  The conservatory appears on the 1940 and 1955 updates of the Sanborn Fire Insurance maps. It continued to exist as late as 1966 according to DPR's Acquisition Central Files; by 1967, it no longer appears on the Sanborn Fire Insurance update.

- A DPR reconstruction of George McKinstry's dental office flanks the candle shop where Sessions' conservatory formerly stood. It is a detracting non-historic, but reversible addition that State Parks should remove.

Roof

- Conversion of original sloped roof into a split-level roof to accommodate an upstairs apartment remodel. The slightly taller roof in the rear is the addition (see photos 2 & 3). Most likely this occurred sometime in the mid-1950s or early 1960s—a change that would not be noted on the Sanborn Fire Insurance updates.

Stairway

- Enclosure of porch at the top of stairway (on Mason Street side) and addition of stucco façade extending back from the porch (see photos 2 & 3). The stucco support wall with six rises remains intact.

Rear Balustrade

- Removal of the wood-slatted balustrade in the building's rear on the south side. According to Requa's construction drawings, the balustrade had alternating sawn and straight posts. It may have been removed when the split-level roof was constructed, probably after 1955.

Decorative Features

- Removal of the flagstone entranceway, street address, and signage on the front façade (see photos 2 & 3). The paved entranceway was originally flagstone from the Salton Sea area of southeastern California.
- Removal of imported Spanish tiles on stairway steps. They have been replaced with beige-blue painted wooden steps. The flagstone entranceway and stairway steps were probably removed sometime after 1943 when Sessions left the premises, leasing it to J. R. Loughman Liquors.

Interior

Upstairs Reception Area

- Replacement of the low plaster-lath wall in the reception room overlooking the interior stairway and downstairs with plasterboard walls (see photo 8). This alteration occurred after 1977 when the building became the park visitor's center. The room originally had an angled, wood-rafter, open-beamed ceiling and hardwood floors. It was tastefully decorated with potted plants and Spanish-period chairs and table. Sessions' office facing San Diego Avenue was partitioned with plaster-lath walls.

***B7. Moved?** X☐ **No** ☐ **Yes** ☐ **Unknown** **Date:** **Original Location:** Same

***B8. Related Features:**

Detached lath house facing San Diego Avenue no longer exists. It was probably removed sometime after 1943 when Sessions leased the property to J. R. Loughman's Liquors. The Sanborn Fire Insurance Map shows the lath house in 1938; it does not appear on the 1948 update.

A detached, single-vehicle garage of similar materials and design located on Mason Street behind the studio still stands. DPR currently uses it as a storage shed.

B9a. Architect: Richard Requa; draftsman, Samuel Hamill **B9b. Builder:** F. E. Young

***B10. Significance: Theme:** landscape design, architecture & tourism **Area** Old Town San Diego

Period of Significance 1929-1942 **Property Type** Commercial **Applicable Criteria** Criterion #2 (Significant Local Person(s)

(Discuss importance in terms of historical or architectural context as defined by theme, period, and geographic scope. Also address integrity.)

Significance

The Sessions building in Old Town San Diego State Historic Park is historically significant under Criterion 2 with its strong association with landscape architect Milton Sessions (1900-1995) and master architect Richard Requa (1881-1941).

Criterion #2 (Significant Local Person(s)

Built in 1929, “Milton P. Sessions Spanish Studio” is a rare local surviving example of a Spanish Colonial Revival building, designed by Requa and used by Sessions as a retail business.

The building retains important character-defining features that illustrate Sessions’ landscaping philosophy of integrating Spanish and Moorish precedents in terms of tile and grill work, arches, water features, and native plant life.

Sessions used the property as a nursery and multi-purpose shop (merchandise, design room, and office); he did not reside in the building. It functioned as his headquarters from 1929 until 1942. During this period, he forged a close working relationship with Requa and emerged as San Diego's “landscape architect of choice.” (Parker Jackson Interview, September 14, 2004).

Milton Sessions opened his nursery in Old Town in 1920 before he hired Requa to design the studio. It encompassed several lots to the west along San Diego Avenue, which he used for “growing yards.” In 1924, Milton's aunt, the well-known horticulturist Kate Sessions, deeded the lot on which he later built his nursery shop.

During this decade, civic leader George Marston launched a campaign to transform the declining community of Old Town into a historic tourist destination. On July 16, 1929, the 37-acre Presidio Park, overlooking Old Town, opened, commemorating the 160th anniversary of the founding of the mission on the hilltop. The park's landscape and architectural designs showcased San Diego's Spanish origins in highly romantic, quasi-mythical images.

The park’s development spurred efforts over the next decade to revitalize Old Town. In 1931-32, San Diego Avenue's connection to the new Coast Highway sparked renewed interest and investment in Old Town. Over the next few years, Cave Couts, Jr. restored the former *casa* of his grandfather Juan Bandini (in Old Town SHP); photographer Lewis John Geddes and wife Frances opened a studio in the refurbished Casa de Machado (in Old Town SHP); and the Works Progress Administration restored the historic Chapel of the Immaculate Conception (just outside Old Town SHP).

Sessions, who grew up in the nursery trade working for his father Frank, was directly involved in civic leader George Marston’s efforts to revitalize Old Town. Along with his famous aunt Kate Sessions, he played a key role in landscaping the 37-acre Presidio Park overlooking the Old Town community after it opened in 1929. His nursery planted some 2,770 plants in the park. Marston hired him to dig up and transplant four full-grown Canary Island palms around the hilltop cross—the park's centerpiece.

The architect Requa played an even more important role than Sessions in the community’s redirection. In 1937, the San Diego Chamber of Commerce hired him to design Old Town and its plaza as a historic tourist district, modeled after Los Angeles’s then popular Olvera Street district. The first step in Marston’s revitalization effort was the Casa de Pico Motor Hotel, an upscale auto hotel and court that opened in 1939 on Calhoun Street. Designed by Requa, it combined distinctive Spanish Colonial and Pueblo Revival architectural features, such as

concrete masonry walls (made on-site), parapets, chimneys, *vigas*, grillwork, and auto garage bays.

Sessions and Requa formed a lasting friendship and business association. In 1928, Sessions traveled with Requa to North Africa, Gibraltar, Italy, and especially Spain (Toledo, Granada, Ronda, Barcelona, Valencia, Segovia, Madrid, Cordova, Seville), photographing the garden details and plants for the architect's designs and drawings. In 1930, they traveled by train through Mexico, documenting that country's rich Spanish-Colonial heritage. The trips inspired Sessions. After his return to San Diego, he lectured widely on gardening and landscaping to garden clubs, civic groups, and schools, and began writing a column for the *San Diego Union* and later the *San Diego Sun*. He also published a popular monthly newsletter, called *Sessions' Garden Pointers*.

The nursery and shop on San Diego Avenue was incorporated in 1930. Along with Milton, the principals were his first wife, Florence B. Sessions, and Frank L. Cook, Jr. The nursery sold plants, trees, shrubs, flowers, pottery, curios, tiles, plasters, cements, garden and home ornaments. It was licensed to construct all “types of building(s),” including bridges, walls, arbors, fountains, pools, pathways, and aviaries. Many of the plants featured in the nursery were native and subtropical species. The shop served Sessions well in educating his clientele about Mediterranean and Southern California style landscapes.

Milton Sessions established an illustrious career while operating his nursery business in Old Town from 1920 to 1942. Along with Presidio Park, he also designed the landscape of the mammoth Ford Building complex, including the Roads to the Pacific, for the 1935-36 California Pacific International Exposition in Balboa Park. Requa was the Expo’s master architect.

Sessions also won commissions during this period to create landscapes for the Marine Corps Recruit Depot at Point Loma, Naval Hospital in Balboa Park, La Jolla Beach and Tennis Club, San Diego's Naval Training Center, and the city's Roosevelt and Memorial junior high schools. He was a consultant for Sunset's premiere *Western Garden Book* series, and served as Chair of the San Diego Park Board from 1939 to 1949.

In addition, he collaborated with Requa on designing a number of private homes in San Diego's wealthier coastal neighborhoods of Kensington Heights, La Jolla, and Coronado. These included the estate of Claus Spreckles, the prize-winning Trevey home at 4162-Third Avenue, the W. A. Gunn home at 1127 F Avenue, the Walter B. Neill residence at 1313-Tenth Avenue, the Heller-Forward family complex at 3123 Zola Street, and the George H. Prudden house at 5159 Marlborough Dr. The latter is currently owned by Requa's biographer, Parker Jackson.

Sessions worked well with this noted architect because he sought to integrate the landscape design into the conditions set by the architecture, topography, climate, and space. He was especially enamored with the use of water fountains, waterfalls, pools, and garden walkways in Moorish designs. Another signature landscape feature of his was garden walls. Considered an extension of the Spanish home, stucco walls—partly covered with flowering shrubs and vines—always bordered the outdoor patio.

On Arbor Day 1993, the San Diego Zoological Society honored Sessions for his contributions by planting a feather duster palm in his name in the zoo's new Australian habitat. In the same year he was named horticulturist of the year by the Cuyamaca College Botanical Society and guest of honor and official host of the Del Mar Flower Show. The City Council designated June 12, 1995 as “Milton P.

Sessions' Day" as a testimony to his many years of dedication to make San Diego a "…more attractive and livable city" (City Council, *Minutes*, June 12, 1995).

Integrity Revise with information on how building reflects Southern California architecture

This Spanish Colonial Revival building has retained much of its original fabric and many of its character-defining exterior features (i.e., glass-panel front doors, abutting arched windows, wrought-iron balcony, outdoor stairwell). While removal of the side wing (the conservatory) and rear balustrade and the addition of a split-level roof have compromised the integrity of design to some degree, the integrity of location, materials, workmanship, and association remain intact.

- Location
  This historic property stands on its original 1929 location.

- Design
  The basic layout of the rooms and significant character-defining Requa features such as the glass-panel front doors with a curved transom, abutting full-size, arched windows, and a small, wrought iron balcony remain intact.

  While the function and ambiance of many of the rooms (i.e., downstairs business office, mezzanine conference room and reception area) have changed over time, their spatial organization has not been altered. None of the original dividing walls have been removed or repartitioned.

- Materials
  The building retains original materials and features like the exterior stucco walls and stairwell, cylindrical clay tile roof, interior cross beams, plaster-lath walls, flagstone tile flooring, and interior wooden staircase. The original glass-panel front doors, arched windows, and 2nd-story balcony facing San Diego Avenue remain intact. These are character-defining features that showcase the building's operation as a commercial enterprise and office studio.

- Workmanship
  Requa's architectural style was characterized by simple, elemental shapes and limited ornamental details. The original stucco facades with their large arched windows and front doors remain intact. Above the doors is the original wrought-iron balcony. Inside, the most unique craft feature is the ceiling with its angled wood rafters and abutting cross beams. The rafters and cross beams are in excellent condition.

  Some decorative elements, like flagstone steps, outdoor tile, interior fountain and antique finished woodwork have been removed from the location. Some of these alterations are reversible. For instance, the original flagstone tile floor in the main room is underneath the present hardwood floor. Others features could be reconstructed because they are noted on the original construction drawings available at the San Diego Historical Society Research Archives

- Setting

The setting or physical environment of this historic property has changed somewhat since the 1930s as shown in the photographs. A 1983 DPR historic reconstruction, the McKinstry Dentist shop, occupies the area off San Diego Avenue where the conservatory once stood. On the Mason Street side, large tropical plants now obscure the closed archway underneath the stairs and the arched window at the foot of the stairway. These are detracting but reversible features that should be removed.

According to 1929 photographs (see photo 6), a garden bed fronted the conservatory on San Diego Avenue. It was sparsely planted with tropical plants. The flagstone entranceway had a number of potted plants (see photo 2). At the cross section of San Diego Avenue and Mason Street, there was a small potted palm (see photo 4). There was another larger palm tree grew on the right side of the closed archway beneath the stair. Potted plants decorated the stairwell and full-size arched window facing Mason Street. The dearth of plantings heightened the esthetic design of the flagstone entrance and staircase steps. The plantings evident in historic photos have been removed or replaced, but the original landscaping can be recreated.

- Feeling
  The aesthetic or historic sense of the 1930s likewise has changed. San Diego Avenue was then a major automobile thoroughfare connected to the Pacific Coast Highway. Today, it is a walkway through a heavily visited state historic park. The location's feeling no longer reflects a busy commercial thoroughfare dependent upon automobiles. This alteration is non-reversible.

- Association
  This historic property has an important association with two historically important individuals. Richard Requa designed the building, and Milton Sessions operated his nursery business on this site from 1929 until 1941-42.

B11. Additional Resource Attributes (List attributes and codes):

***B12. References:**

"Old Town Building Permits," courtesy Jim Newland, State Historian III, DPR, Southern Service Center,
San Diego;

Sanborn Fire Insurance Map, 1938, vol. 4, sheet #403; updated. 1948, vol. 4, sheet #403; updated 1955,
sheet #403; San Diego Historical Society Research Archives;
City Council, *Minutes*, June 12, 1995, p. 4;
Deed Book #982, (lot #2, block #453, Old San Diego), January 4, 1924, pp. 76-77; #3923, December 18, 1950, p. 18,
San Diego County Assessor Office;
Frye & Smith Official San Diego City Directory, 1941, pp. 666, 1047; 1942, p. 1183; 1943, p. 1247; 1944-45, Pt. I,
p. 656; 1947-48, Pt. 2, p. 1579; 1950, p. 1484, 1953-1954, p. 1105; 1956, p. 1449; 1957, p. 1451; 1958, Pt. 2,
p. 485; 1959, Pt. 2, p. 526; 1960, Pt. 2, p. 537; 1961, p. 663; 1962, p. 690; 1963-1964, Pt. 2, p. 702; 1965, p. 697,
1966, p. 817; San Diego Historical Society Research Archives;

DPR*, Acquisitions Old Town SHP*, Central Files, Sacramento (1966-1967), Southern Service Center;
George Marston Papers, MS-35, Box #3, Folder 54, San Diego Historical Society Research Archives;
Interview with Milton Paine Sessions, San Diego Historical Society (November 1, 1990); pp. 2-3, 6-7, 9-11, San Diego Historical Society Research Archives;
Richard Requa and Herbert L. Jackson, *Architectural Drawings*, Milton P. Sessions Building, (March 8, 1929) at San Diego Historical Society Research Archives;
Requa, "The Architectural Style for Southern California," *San Diego Business*, October 1, 1926;
_____, *Architectural Details, Spain and the Mediterranean* (1926);
_____, *Old World Inspiration for American Architecture* (1929);
"Studio Building Spanish Design in Pure White," *San Diego Union* (September 15, 1929), p. 4;
Alexa Luberski, *DPR 523* (October 1983), pp. 1-2, Southern Service Center;
Parker H. Jackson, *Inside Lights on the Building of San Diego's Exposition, 1935* (1998);
_____, producer, "The Landscaped World of Milton P. Sessions," Pts. 1 & 2 (HTR Creative Services, 1996), La Jolla Public Library;
_____, Interview, September 14, 2004;
Mary Taschner, "Richard Requa, Southern California Architect, 1881-1941," (MA thesis, University of San Diego, 1982);
Milton Sessions *Scrapbook*, Info Box #107, folder #4 contains newsclippings and memorabilia, San Diego Historical Society Research Archives;
Milton P. Sessions, Inc., Articles of Incorporation, March 24, 1930, Box 62, File #1, San Diego Historical Society Research Archives;
Ron Quinn, State Historian to Edward Navarro, District Supt. (September 18, 1991), DPR, San Diego Coast District Files #3690;
Harriet Kimbro, "Bazaar del Mundo -- Old Town Cinderella or Her Pumpkin," Paper delivered at the 17th annual Institute of History (February 1985), p. 6, San Diego Historical Society Research Archives;
Phyllis Van Doren, "The Enduring Architectural Style That Defines San Diego," *San Diego Home and Garden*, vol. 15, #11 (July 1994), pp. 33, 110;
Milton P. Sessions, Farm and Garden News Section, *San Diego Union*, March 24, 1929, p. 4; April 7, 1929, p. 2; April 14, 1929, p. 4.
"Expert To Write Column For *Sun* Readers," *San Diego Sun*, December 17, 1938;
Alyce Quackenbach, "Sessions watches his legacy grow up," *La Jolla Light*, June 24, 1993, pp. C1, C7;
Karen C. Wilson and Lucy Warren, "His Love of Plants Still Blossoms," *San Diego Union Tribune*, November 5, 1995, pp. H19, H21;
"Milton P. Sessions; landscape work brightened area," *San Diego Union Tribune*, October 25, 1995;
Ann Jarmusch, "Design on San Diego," *San Diego Union-Tribune*, May 27, 2001;
Gregg R. Hennessey, "Creating a Monument, Re-Creating History: Junipero Serra Museum and Presidio Park," *Journal of San Diego History*, vol. 45, #3 (Summer 1999).

B13. Remarks:

Sessions ran his nursery and landscaping business out of this building from 1929 until 1942. Exterior and interior historic photographs and architectural drawings of the Sessions Studio are available at the San Diego Historical Society Research Archives. Thus, documentation exists to restore the property to its original state.

***B14. Evaluator:**
***Date of Evaluation:**

Photo 1: Toby's Candle Shop, looking east from Mason Street, Nov. 2003

Photo 8: Reception Room & Office on Upper Mezzanine, 1929

SKETCH MAP Trinomial

*Drawn By: Victor A. Walsh, State Historian II, San Diego Coast District

*Date: **Sept. 15, 2004**

DPR 523K (1/95)

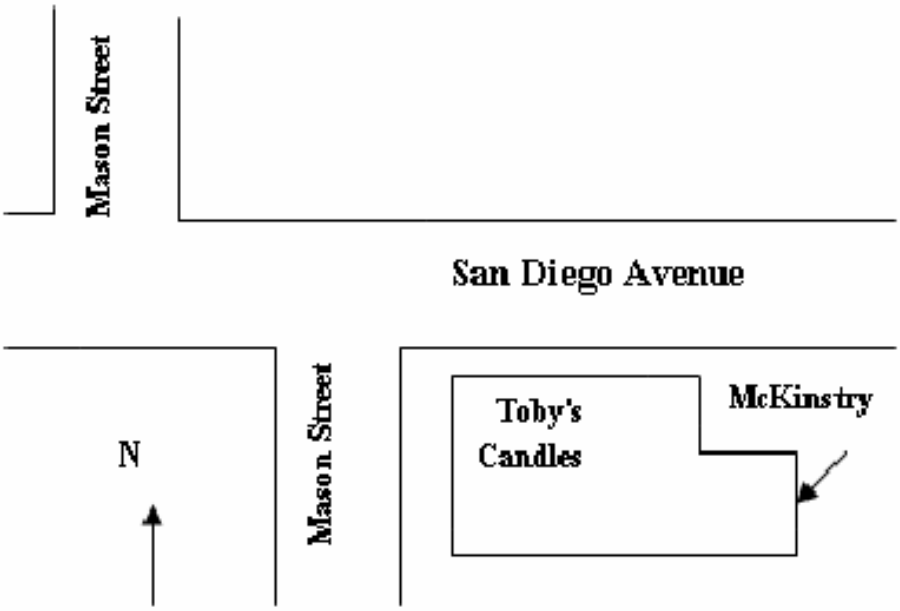

section 32

Routes of Travel

I. CONCEPT

A. Routes of travel represent the primary path that a pedestrian would typically use to access a building, facility or activity. In the park setting there are two different types of routes that may be used to connect the elements within a use area. Which type of route to use depends upon the level of development in the area and the elements that are being connected. Trails and Beach Access Routes are also used throughout parks, but they are not appropriate routes for use to connect elements within a specific use area. *(Refer to Trails, Section 40, or Beaches and Shores, Section 5, for technical requirements for Trails or Beach Access Routes.)*

B. The most usable route for people with mobility impairments is the Exterior Route of Travel (ERT). The technical requirements for ERTs must be met in highly developed areas, such as paved parking lots to offices, visitor centers, museums and restrooms. Since they are the easiest to use, the grade requirements for ERTs should be met whenever possible in the park setting.

C. Outdoor Recreation Access Routes (ORAR) are used to connect elements within a camping, picnic, or designated trailhead use area. Typical applications of ORARs are from a campsite to the restroom or campfire center, within a picnic area or between the picnic site and an activity area, such as a trailhead.

II. EXTERIOR ROUTES OF TRAVEL (ERT)

A. General:

1. The accessible route shall be the most practical and direct route possible. It shall incorporate the guidelines of curb ramps, ramps, etc. when necessary.

   CBC-1127B.1

2. A sign displaying the International Symbol of Accessibility (ISA) at the primary entrance and at every major junction of the accessible route shall be installed. The sign shall be displayed to direct the user to an accessible entrance.

   CBC-1127B.3

3. The slope in the direction of travel shall be a maximum of 5%. Where conditions dictate a slope greater that 5%, a ramp shall be provided. *(Refer to Ramps, Section 30.)*

   ADAAG-4.3.7/CBC-1133B.7.3

4. Walkways with continuous gradients shall have level areas 60" in length at intervals of 400' **(Figure 32-1).**

   CBC-1133B.7.6

5. If an accessible route is less than 60" wide, passing spaces at least 60" by 60" shall be located at maximum intervals of 200' **(Figure 32-1).**

   ADAAG 4.3.4

6. The slope perpendicular to the direction of travel, cross slope, shall be a maximum of 2%.

   ADAAG-4.3.7/CBC-1133B.7.1.3

7. The surface must be firm, stable and slip resistant. Surface changes in elevation shall be 1/4" maximum. Surface elevation changes between 1/4" and 1/2" shall be beveled at 50%. Surface elevation changes greater than 1/2" must be ramped.

   ADAAG-4.3.8/CBC-1124B.1-2

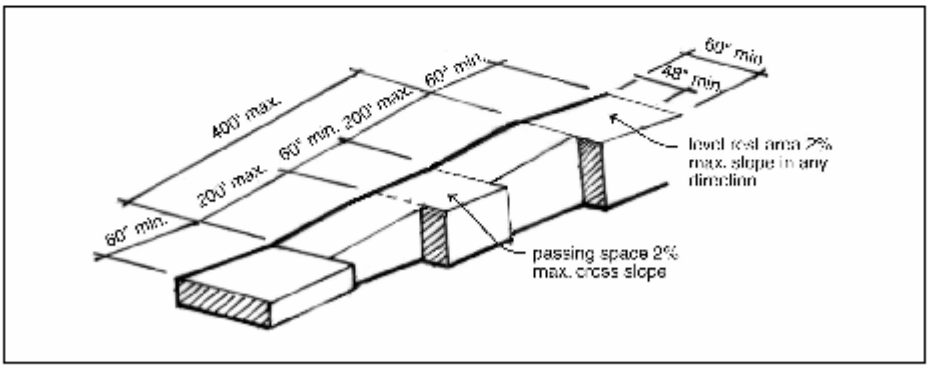

Figure 32-1

8. Route width shall be 48", except where undue hardship based upon right-of-way restriction, natural barriers or other existing conditions occur, in which case a minimum of 36" width is permitted. Surfaces shall be slip resistant **(Figure 32-2).**

   CBC-1133B.7.1-3

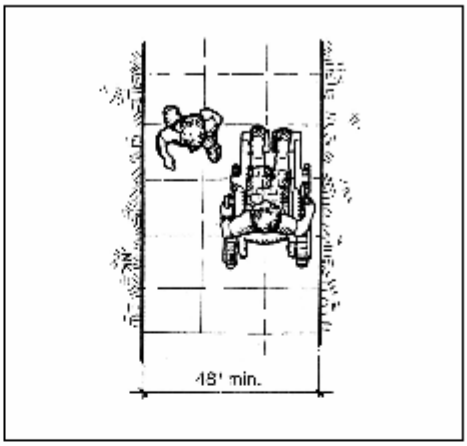

Figure 32-2

B. Details:

1. Grate openings shall have spaces no greater than ½" wide and may be elongated, provided that long direction runs perpendicular to the primary direction of travel **(Figure 32-3).**

   ADAAG-4.5.4/CBC-1124B.4

2. Exterior doormats shall be anchored or recessed to prevent interference with wheelchair traffic.

   CBC-1133B.1.1.1.3

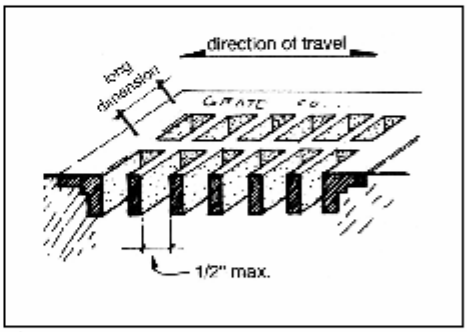

Figure 32-3

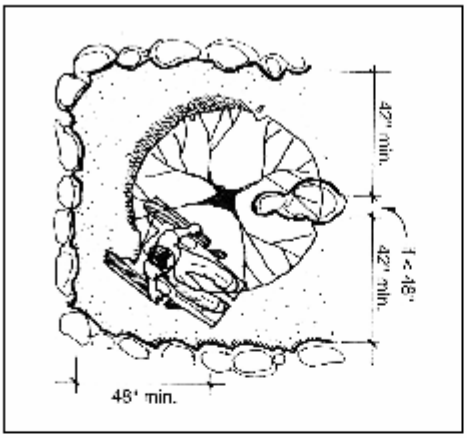

Figure 32-4

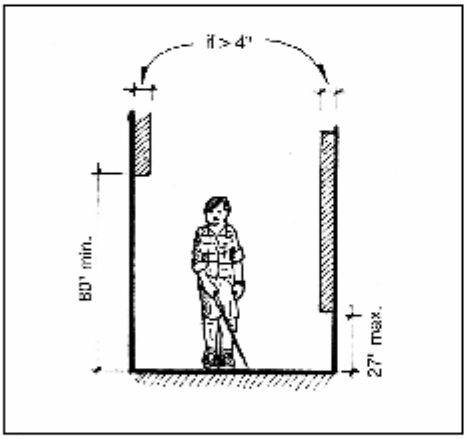

Figure 32-5

3. Where wheelchair traffic is expected to make a U-turn around an obstacle, the route width must be a minimum of 42" on the approach and 48" around the obstacle **(Figure 32-4).**

   ADAAG-4.3.3

4. Where the route is less than 60" in width, a 60" x 60" passing space shall be provided at intervals of 200'.

   ADAAG-4.3.4

5. Objects that protrude into the accessible route with their leading edge between 27" and 80" from the ground, such as a telephone, shall not protrude more than 4". Objects mounted below 27" may protrude any amount but shall not reduce the clear width of the accessible route **(Figure 32-5).**

   ADAAG-4.4.1/CBC-1133B.8.6

6. Vertical clearance on the accessible route shall be 80". If the vertical clearance of an area adjoining the accessible route is less than 80", a cane detectable barrier to warn the visually impaired shall be provided **(Figure 32-6).**

   ADAAG-4.4.2/CBC-1133B.8.6.2

7. Except at walks adjacent to streets or driveways where changes in level are greater than 4" in vertical dimension occur, such as planters or fountains, a 6" high warning curb or a handrail with guide rails centered at 2" to 4" above the ground shall be installed.

   CBC-1133B.8.1

8. Detectable ground surface or pavement warnings shall be provided where the access route crosses or adjoins a vehicular travel way, or a transit-boarding platform, that is not separated by a curb, guardrails or handrails.

   CBC-1133B.8.3-5

9. Detectable warnings shall be durable, slip-resistant, truncated domes with an inline grid that extends 24" minimum in the direction of travel. Domes shall have a diameter of 0.9" at the bottom, a diameter of 0.4" at the top, a height of 0.2" and a center-to-center spacing of 2.35",

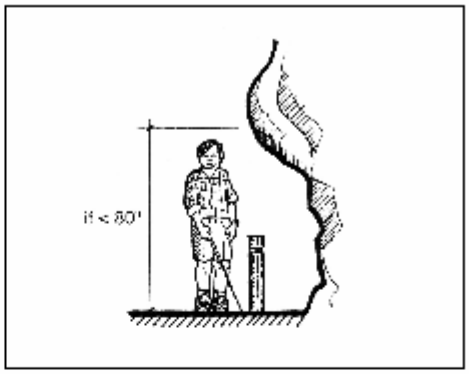

Figure 32-6

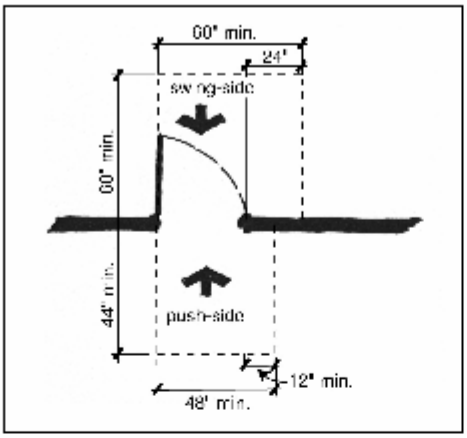

Figure 32-7

measured along one side of a square grid (for acceptable deviations in dome shape, contact the Accessibility Section. The detectable warnings shall contrast visually from the adjacent surface both in color and in resiliency or sound upon contact with a cane. Additional requirements apply at passenger loading zones on transit boarding platforms.

CBC-1133B.8.3

10. A level area of at least 60" x 60" shall be provided on the pull side of any door or gate and shall extend 24" to the side of the strike edge. A level area of 48" wide x 44" deep shall be located on the push side of any door or gate **(Figure 32-7).**

ADAAG-4.13.6/CBC-1133B.7.5

III. OUTDOOR RECREATION ACCESS ROUTES (ORAR)

A. General:

1. Running slopes in the direction of travel shall be as follows:

   99AG-16.3.7.2.1-3

   a. 5% or less for any distance.

   b. From 5.1% to 8.3% for 50' maximum.

c. From 8.34% to 10% for 30' maximum.

d. Slopes greater than 10% are not permitted.

2. Resting spaces shall be 60" minimum in length, shall have a width at least as wide as the route and have a slope of 3% or less. Exception: the slope of the resting space can be as great as 5%, if required for proper drainage. The installation of resting spaces is required as follows:

99AG-16.3.8

Percent slope	Max. length	Rest interval
0% to 5.0%	No restriction	No restriction
5.1% to 8.33%	50'	Every 50'
8.34% to 10%	30'	Every 30'

3. The surface of the ORAR shall be stable and firm.

99AG-16.3.1

4. The clear tread width shall be 36", except the width may be reduced to 32" for a distance of 24" maximum where existing conditions cannot be mitigated.

99AG-16.3.2

5. The slope perpendicular to the direction of travel, cross slope, shall be 3% maximum. Exception: the cross slope can be as great as 5%, if necessary for proper drainage.

99AG-16.3.7.1

B. Details:

1. Openings in the surface, such as on a boardwalk, cannot be greater than 1/2" wide. Elongated openings shall be placed so that the long dimension is perpendicular or diagonal to the dominant direction of travel **(Figure 32-8).** Exception: openings are permitted to run parallel to the direction of travel so long as the opening is no wider than 1/4".

99AG-16.3.3

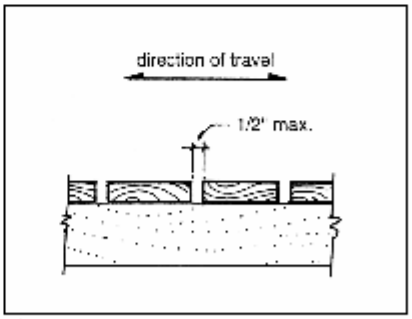

Figure 32-8

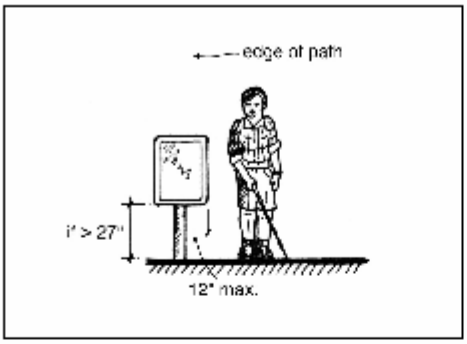

Figure 32-9

2. Objects that protrude into the route with their leading edge between 27" and 80" from the ground, such as a telephone, shall not protrude more than 4" **(Figure 32-5)**. Objects mounted below 27" may protrude any amount but shall not reduce the clear width of the accessible route **(Figure 32-9)**.

   99AG-16.3.4/ADAAG-4.4.1

3. Vertical clearance shall be 80". If the vertical clearance of an area adjoining the accessible route is less than 80", a cane detectable barrier to warn the visually impaired shall be provided **(Figure 32-6)**.

   99AG-16.3.4/ADAAG-4.4.2

4. Tread obstacles, such as roots or rocks, shall not be higher than 1". Exception: obstacles may be up to 2" high if they are beveled at 50% or if environmental conditions prohibit their removal.

   99AG-16.3.5

5. Where the width of the route is less than 60", passing spaces measuring 60" x 60" shall be provided at intervals of 200'.

   99AG-16.3.6

6. Where edge protection is provided, it shall have a height of 3" minimum.

   99AG-16.3.9

ATTACHMENT 3 – RFP

REFERENCES FOR HISTORIC-STYLE CONCESSIONS IN OLD TOWN SAN DIEGO STATE HISTORIC PARK

Accessibility

All Visitors Welcome: Accessibility in State Park Interpretive Programs and Facilities by Erika Porter. Published by the California Department of Parks and Recreation. Rev ed. 2003.

Old Town & Its Merchants

Old Town San Diego Retailer's Reference and Historic Account Book, Or, Advice for Merchants Re-creating a c.1821-1872 Store by Mary A. Helmich. Published by the California Department of Parks and Recreation.

Picturing Mexican California. 3 CD set. Compiled by Mary A. Helmich. California State Parks, 2001.

Historic Sign Guidelines

Old Sacramento Historic District A Guideline for Signs, 1849-1875 by Stephen G. Helmich. Published by the City of Sacramento.

Historic Clothing and Fabrics

Dating Fabrics: A Color Guide, 1800-1960. By Eileen Jahnke Trestain. American Quiter's Society, Paducah, KY, 1998.

Textiles for Early Victorian Clothing, 1850-1880: A Workbook of Swatches & Information. By Susan W. Greene. Q Graphics Production Company, 2002.

Fancy Dry Goods & Clothing Store in Columbia State Historic Park / Chili 'n Crackers. Isabella's Workdress Pattern. http://home.mlode.com/~jimnlindy/patterns.html

Past Patterns—period patterns for clothing 1830 to 1820. (866) 738-8426 or www.paspatterns.com

"…With Our Calfiornia Rig on…": A brief review of the costume of Americans in the California Gold Rush. Part 1: Caps, Hats and Overshirts. Written and illustrated by Jim Miller. Chile-n-Crackers, Columbia.

Thoughts on Men's Shirts in America, 1750-1900. By William L. Brown III. Thomas Publications, Gettysburg, PA, 1999.

Who Wore What? 1861-1865 Clothing by Juanita Leich. Published by Thomas Publications, Gettysburg, PA, 1995.

Gohn Brothers Clothing—broadfalls, & men's plain dress. www.nonviolence.org/martink/gohn_brothers_broadfalls_mens_plain_dress.php

Interpretation

Environmental Interpretation: a Practical Guide for People with Big Ideas and Small Budgets by Sam Ham. Published by North American Press.

Past Into Present: Effective Techniques for First Person Historical Interpretation by Stacy Roth. University of North Carolina Press, Chapel Hill, 1998.

Interpretation of Historic Sites. By William T. Alderson and Shirley Payne Low. American Association for State and Local History, Nashville, TN.

Provided:
March 13, 2008
M.A. Helmich

SAMPLE CONCESSION CONTRACT

FOR

Casa de Wrightington and Sessions Building
Historic-Style Specialty Retail Concession

AT

Old Town San Diego State Historic Park

SAMPLE

STATE OF CALIFORNIA – RESOURCES AGENCY
DEPARTMENT OF PARKS AND RECREATION
CONCESSIONS AND RESERVATIONS DIVISION
1416 NINTH STREET, 14TH FLOOR
SACRAMENTO, CA 95814

Casa de Wrightington Historic-Style Specialty Retail Concession
CONCESSION CONTRACT
INDEX

SAMPLE CONCESSION CONTRACT 70
1. DESCRIPTION OF PREMISES 74
2. CONDITION OF PREMISES 75
3. TERM 75
4. RENT 76
5. USE OF PREMISES 78
6. BONDS 80
7. INSURANCE 82
8. ALCOHOLIC BEVERAGES 84
9. CONSTRUCTION AND COMPLETION OF IMPROVEMENTS 84
10. CONTRACT NOTICE 88
11. RECORDS AND REPORTS 89
12. GROSS RECEIPTS 90
13. RATES, CHARGES AND QUALITY OF GOODS AND SERVICES 90
14. PERFORMANCE EVALUATIONS AND INSPECTION 91
15. HOLD HARMLESS AGREEMENT 91
16. TAXES 92
17. MODIFICATIONS, ADDITIONS, TITLE TO IMPROVEMENTS 92
18. PERSONAL PROPERTY 93
19. HOUSEKEEPING, MAINTENANCE, REPAIR AND REMOVAL 93
20. UTILITIES AND SERVICES 95
21. RESOURCE CONSERVATION 95
22. HAZARDOUS SUBSTANCES 97
23. EQUIPMENT 99
24. SIGNS AND ADVERTISING 99
25. PHOTOGRAPHY 99
26. INTELLECTUAL PROPERTY RIGHTS 99
27. PARTICIPATION IN STATE PARK MARKETING PROGRAMS 101
28. DEFAULT BY CONCESSIONAIRE 102
29. STATE'S REMEDIES 103

SAMPLE

30. DEFAULT BY STATE 107
31. STATE BUY-OUT PROVISIONS 107
32. SURRENDER OF THE PREMISES; HOLDING OVER 109
33. NO RECORDATION; QUITCLAIM 110
34. ATTORNEYS FEES 110
35. COMPLIANCE WITH LAWS, RULES, REGULATIONS AND POLICIES 110
36. NONDISCRIMINATION 111
37. DISABILITIES ACCESS LAWS 112
38. EXPATRIATE CORPORATIONS 112
39. DRUG-FREE WORKPLACE 113
40. NATIONAL LABOR RELATIONS BOARD CERTIFICATION 113
41. CHILD SUPPORT COMPLIANCE ACT 113
42. EMPLOYEE TRAINING 114
43. CONFLICT OF INTEREST 114
44. WAIVER OF CLAIMS 114
45. WAIVER OF CONTRACT TERMS 115
46. INTERPRETATION OF CONTRACT 115
47. DURATION OF PUBLIC FACILITIES 115
48. TIME OF ESSENCE 115
49. EMINENT DOMAIN 116
50. TEMPORARY TENANCY 116
51. SECTION TITLES 116
52. CONTRACT IN COUNTERPARTS 116
53. INDEPENDENT CONTRACTOR 116
54. ASSIGNMENTS AND SUBCONCESSIONS 116
55. MODIFICATION OF CONTRACT 117
56. UNENFORCEABLE PROVISION 117
57. APPROVAL OF CONTRACT 117
58. STATE'S DISTRICT SUPERINTENDENT 118
EXHIBIT A – THE PREMISES 2
EXHIBIT B - CONSUMER PRICE INDEX ADJUSTMENT FORMULA 1
EXHIBIT C – DPR 54, CONCESSIONAIRE'S MONTHLY REPORT OF OPERATION . 1
EXHIBIT D – OPERATION PLAN 1

SAMPLE

EXHIBIT E – FACILITY PLAN FOR CASA DE WRIGHTINGTON 1
EXHIBIT E – FACILITY PLAN FOR SESSIONS BUILDING 1
EXHIBIT F - INTERPRETIVE PLAN 1
EXHIBIT G – DPR 86 CONCESSIONAIRE FINANCIAL STATEMENT 1
EXHIBIT H – DPR 531, CONCESSION PERFORMANCE RATING 1
EXHIBIT I – CONCESSION MAINTENANCE PROGRAM 1
IMPORTANT NOTE: 1
EXHIBIT J – DRUG FREE WORKPLACE CERTIFICATION STD 21 1

SAMPLE

STATE OF CALIFORNIA

DEPARTMENT OF PARKS AND RECREATION

SAMPLE CONCESSION CONTRACT

For

Casa de Wrightington Historic and Sessions

Historic-Style Specialty Retail Concession

Located In

Old State San Diego State Historic Park

San Diego County

THIS CONTRACT is made and entered into by and between the STATE OF CALIFORNIA, acting through its Department of Parks and Recreation, hereinafter referred to as "State", and **Concessionaire** of City, State, hereinafter referred to as "Concessionaire";

RECITALS

WHEREAS, California Public Resources Code Section 5080.03 et seq. authorizes the Department of Parks and Recreation to enter into concession contracts for the operation of state park system lands and facilities and;

WHEREAS, it is appropriate that the following contract be entered into for the safety and convenience of the general public in the use and enjoyment of, and the overall enhancement of recreational and educational experience at units of the state park system;

NOW, THEREFORE, IT IS MUTUALLY AGREED BY AND BETWEEN THE PARTIES AS FOLLOWS:

1. DESCRIPTION OF PREMISES

The State for and in consideration of the agreements hereinafter stated, grants to Concessionaire for the purposes stated herein, the right, privilege, and duty to develop, equip, operate, and maintain a nonexclusive concession in Old Town San Diego State

SAMPLE

Historic Park in the Casa de Wrightington building (2769 San Diego Avenue) as set forth in **Exhibit A,** attached to and made a part of this contract (the "Premises").

The possessory interest herein given to the Concessionaire does not exclude the general public from the Premises; however, the use by the general public is limited by the terms and conditions of the possessory interest given herein. This contract is not intended to confer third party beneficiary status to any member of the public who is benefited by the terms of this contract. The possessory interest is further subject to all valid and existing contracts, leases, licenses, encumbrances, and claims of title that may affect the Premises.

2. CONDITION OF PREMISES

The taking of possession of the Premises by the Concessionaire, in itself, shall constitute acknowledgment that the Premises are in good and sufficient condition for the purposes for which Concessionaire is entering into this contract. Concessionaire agrees to accept Premises in their presently existing condition, "AS IS", and that the State shall not be obligated to make any alterations, additions, or betterments to the Premises except as otherwise provided for in this contract.

3. TERM

The term of this contract shall be for a period of ten (10) years**,** commencing on the first day of the month following approval by the Department of General Services. Should Concessionaire hold-over after the expiration of the term of this contract with the express or implied consent of the State, such holding-over shall be deemed to be a tenancy from month-to-month at the herein stated prescribed rent as set forth in this contract in Section 31, “Surrender of Premises; Holding Over”, of this contract, with continuous Consumer Price Index adjustment, as defined below, subject otherwise to all the terms and conditions of this contract.

For purposes of this contract, the term "contract year" shall mean each one-year period of time that commences on the commencement date identified above, extending twelve (12) months there from, and continuing from each anniversary throughout the term of the contract.

SAMPLE

4. RENT

Concessionaire shall pay, without offset, deduction, prior notice, or demand, as "Minimum Annual Rent":

The sum of forty-two thousand dollars ($42,000) [or as bid] per year or nine percent (9%) [or as bid] of annual gross receipts (for Casa de Wrightington), whichever sum is greater; and /or

The sum of forty-two thousand dollars ($42,000) [or as bid] per year or nine percent (10%) [or as bid] of annual gross receipts (for Sessions Building), whichever sum is greater.

Beginning with Contract Year Six (6) and on the first day of each fifth contract year thereafter, the Minimum Monthly/Annual Rent shall be adjusted to reflect changes in the Consumer Price Index (CPI). Such CPI adjustments shall be made in accordance with the procedure set forth in **Exhibit B,** attached to and made a part of this contract. Concessionaire shall make payment of Minimum Annual Rent and other payments to State in lawful money of the United States. However, if any payment made by a check, draft, or money order is returned to State due to insufficient funds or otherwise, State shall have the right, at any time after the return, upon written notice to Concessionaire, to require Concessionaire to make all subsequent payments in cash or by cashier's or certified check.

Beginning with the fifteenth (15th) day of the month following the execution of the contract and on or before the fifteenth (15th) day of each month thereafter, Concessionaire shall furnish to State a verified statement of the concession's gross receipts for the preceding month. Such statement shall be submitted on Form DPR 54, "Concessionaire's Monthly Report of Operation", attached hereto as **Exhibit C**, or in a format previously approved by the State, and shall specify the current period and cumulative total of gross receipts for the concession through the end of the preceding month for the then current contract year. Concurrent with such monthly statement, the Concessionaire shall pay to State the appropriate rental fee for the preceding calendar month as prescribed above. Payments to State shall be made to the order of the Department of Parks and Recreation and delivered to the District Office identified herein below or at such other location as may from time to time be designated by State. If, at

SAMPLE

the end of the contract year, the total of monthly percentage rental payments made (or due) during that contract year is less than the Minimum Annual Rent required for that contract year, the difference shall be remitted to State with the last monthly sales statement for the contract year. Payments must be received by State on or before the fifteenth (15th) day of the month as described above. Any late payment shall constitute a breach of contract, giving rise to State's remedies as set forth below. Further, any late payment will be subject to a late penalty consisting of an administrative charge on the late amount, calculated at the rate of five percent (5%) of the amount of the late payment or portion thereof. The parties agree that the late charge represents a fair and reasonable estimate of the costs State will incur because of late payment. Acceptance of the late charge by State shall not constitute a waiver of Concessionaire's default for the overdue amount, nor prevent State from exercising the other rights and remedies granted under this contract. Concessionaire shall pay the late charge as additional rent with the next monthly rent payment.

_____ **[Initials of concessionaire(s)]**

Any amount due to State, if not paid within five (5) days following the due date, will bear interest from the due date until paid at the rate of ten percent (10%) per year or, if a higher rate is legally permissible, at the highest rate legally permitted. However, interest shall not be payable on late charges incurred by Concessionaire, nor on any amounts on which late charges are paid by Concessionaire, to the extent this interest would cause the total interest to be in excess of that legally permitted. Payment of interest shall not excuse or cure any default by Concessionaire.

Upon written request by the Concessionaire to State demonstrating unusual or extenuating circumstances causing the late payment, the State, in its sole discretion, may waive the late charge. Further, in the event Concessionaire is prevented from carrying on the operations contemplated herein by reason of an Act of Nature or other reasons beyond Concessionaire's control, and when requested in writing in advance by Concessionaire, Minimum Rent may be abated in proportion to the amount by which gross receipts are reduced by the occurrence for such period of reduced or non-operation, as determined in the sole discretion of State.

SAMPLE

If this contract is terminated by State because of Concessionaire's default, and if Concessionaire becomes liable for any deficiency in rent and/or fees by way of damages or otherwise, or if at any time during the contract term Concessionaire ceases to conduct in the Premises the business referred to herein below, then from and after the time of the breach causing this termination, or from and after the time of the cessation of business, all unpaid rent and/or fees prior to the breach causing termination or cessation of business shall become due and payable. The amount due shall be deemed to be the greater of: (a) the Minimum Rent provided herein, or (b) an amount based upon the average of the payments that have accrued to State as percentage rent during the twenty-four (24) months preceding the termination or cessation of business, unless the termination or cessation occurs within three (3) years of the beginning of the contract term, in which event the previous twelve (12) (or fewer, if applicable) months shall be used as the basis of this average.

5. USE OF PREMISES

A. The Premises shall be used by the Concessionaire for the operation of a historic-style specialty retail concession consistent with the State approved “Operation Plan”, “Facility Plan”, and “Interpretive Plan” as proposed by Concessionaire and modified by State as is reasonable and necessary to meet the intention of the State for this concession operation and the mission of the Department. The “Operation Plan”, “Facility Plan”, and “Interpretive Plan” are incorporated herein and made part of this contract as **Exhibits D, E, and F**, respectively.

B. Interpretive Period: Concessionaire shall provide a retail operation that creates and perpetuates as closely as possible the Transitional Period of 1846-1856 in San Diego (“Interpretive Period”) for Casa de Wrightington and/or the American Period of 1856-1872 for Sessions. All aspects of the concession’s décor and ambiance, including furnishings, lighting, counters, shelving, window treatments, display pieces, music, retail product, and interior and exterior signage, shall be appropriate to the Interpretive Period. Modern equipment shall be disguised or hidden from

SAMPLE

public view; this includes but is not limited to cash registers, fans, and credit card machines. Deviation from the Interpretive Period shall not be permitted except as approved in writing by the District Superintendent or designee.

C. Period Attire: All concession employees visible to or engaging with the public shall be dressed in attire appropriate to the Interpretive Period and the retail business being depicted.

D. Concession services shall be provided seven days a week as follows:

- ❑ October through May Sunday through Thursday, 10 a.m. until 6 p.m., Friday and Saturday 10 a.m. until 7 pm.
- ❑ June through September, 10 a.m. until 7 p.m., Monday through Thursday and 10 a.m. until 8 p.m. Friday through Sunday;
- ❑ except for the last Thursday in November, December 25th and January 1st. at which time the concession may close.

E. In the event State deems the hours of operation inadequate for proper service to the public, State may require Concessionaire to adjust the days and/or hours of operation to a schedule provided by State. Concessionaire may remain open on other dates, observing same (or longer) hours, at Concessionaire's discretion with the concurrence of State. In the event of adverse weather or other operating conditions, State may permit the concession to close at any time during the term of this contract.

F. Concessionaire shall not use or permit the Premises to be used in whole or in part during the term of this contract for any purpose other than as herein set forth without the prior written consent of the State.

Security: Concessionaire will require all concession employees and volunteers in positions of special trust as determined at the sole discretion of the District Superintendent or designee to undergo a background check, including references and fingerprints, to ensure that the individual has an acceptable record as a law-abiding citizen. The background check may be similar to the California Department of Justice's

SAMPLE

Live-Scan Program. Concessionaire shall be responsible for covering all costs associated with said background checks. Any criminal offenses that have a nexus to said job should be considered as a basis for rejection from hire.

6. BONDS

A. All bonds required under this contract must be in a form satisfactory to State, issued by a corporate surety licensed to transact surety business in the State of California.

B. Performance Bond: Concessionaire, at Concessionaire's own cost and expense, agrees to obtain and deliver to State, prior to the commencement date of this contract and prior to entering the Premises, and shall maintain in force throughout the term of this contract, a valid Performance Bond (which may be renewed annually) in the sum of one year's current Minimum Annual Rent payable to the State. This bond shall insure faithful performance by Concessionaire of all the covenants, terms, and conditions of this contract inclusive of, but not restricted to, the payment of all rentals, fees, and charges and prompt performance of and/or payment for all maintenance obligations. In lieu of a bond, the Concessionaire may substitute another financial instrument (such as an Irrevocable Standby Letter of Credit), which must be sufficiently secure and acceptable to State. At least thirty (30) days prior to the expiration or termination of said bond or acceptable financial instrument, a signed endorsement or certificate showing that said bond or financial instrument has been renewed or extended shall be filed with the State. Within 15 days of State's request, Concessionaire shall furnish State with a signed and complete copy of the valid bond or financial instrument.

Beginning with Contract Year Six (6), and on the first day of every fifth contract year thereafter, the required bond amount shall be adjusted to reflect changes in the Consumer Price Index (CPI). Such CPI adjustments shall be made in accordance with the procedure set forth in **Exhibit B**.

C. Construction Payment Bond: Prior to the commencement of construction required hereunder, Concessionaire shall furnish the State with a bond, listing

SAMPLE

Concessionaire's contractor(s) as principals, in a sum not less than **fifty percent (50%)** of the total cost of the construction. The bond shall guarantee payment by Concessionaire of all materials, provisions, provender, supplies, and equipment used in, upon, for, or about the performance of said construction, and protect the State from any liability, losses, or damages arising therefrom. In no event shall Concessionaire allow the imposition of a mechanics' lien or other lien on the concession property, and at its sole expense shall take all steps to remove such liens or the threat of such liens.

D. Construction Performance Bond**:** Prior to the commencement of construction required hereunder, Concessionaire shall furnish the State with a bond, listing Concessionaire's contractor(s) as principals, in a sum not less than **fifty percent (50%)** of the total cost of the construction. The bond shall guarantee faithful performance of the construction by Concessionaire.

E. Concessionaire acknowledges that allowing the Performance Bond or other security instrument(s) to expire or otherwise terminate and/or allowing the total secured amount to fall below the security required herein will cause State to incur costs and significant risks not contemplated by this contract, the exact amount of which will be difficult to ascertain. These costs include, but are not limited to, administrative costs and other expenses necessary to ensure continued performance of services for the public and protection of the Premises. Accordingly, if Concessionaire allows the Performance Bond or other security instrument to expire or otherwise terminate and/or allows the total secured amount to fall below the security required pursuant to this contract, Concessionaire shall pay to State an amount equal to five percent (5%) of the required security or five thousand dollars ($5,000), whichever is greater. The parties agree that this charge represents a fair and reasonable estimate of the costs State will incur. Acceptance of this charge by State shall not constitute a waiver of Concessionaire's default, nor prevent State from exercising the other rights and remedies available to it under this contract or applicable law, including the right to terminate this contract and seek the payment of damages.

_____ **[Initials of concessionaire(s)]**

SAMPLE

7. INSURANCE

A. Concessionaire shall provide before entering the Premises and shall maintain in force throughout the term of this contract the following insurance:

1) Liability Insurance:

- Commercial General Liability
- Products Liability
- Automobile Liability (for all owned, non-owned, and hired vehicles used by Concessionaire in the conduct of business under this contract)

Each policy of liability insurance described above shall be in an amount of not less than One Million Dollars ($1,000,000) per occurrence for bodily injury and property damages combined.

2) Workers' Compensation Insurance: Concessionaire acknowledges laws which require every employer to be insured against liability for Worker's Compensation and Concessionaire affirms to comply with applicable requirements of the Labor Code of the State of California. Such insurance shall include employer's liability coverage of One Million Dollars ($1,000,000) and shall specifically cover all persons providing services by or on behalf of the Concessionaire and shall cover all risks to such persons under this contract.

3) Fire Insurance: Fire insurance with extended coverage endorsements thereon on all improvements located on the Premises, whether furnished by State or constructed upon the Premises by Concessionaire, in an amount equal to the full replacement cost and/or value thereof. This policy shall contain a replacement cost endorsement naming the Concessionaire as the insured provided that if there is a lender on the security of the improvements so insured, the proceeds of any such policy or policies may be made payable to such lender.

B. In the event of destruction, loss, or damage by fire or other cause of any of the State-owned buildings, improvements, or fixtures located on the Premises

SAMPLE

that the State determines (1) to be essential to the continued operation of the contract and (2) cannot be repaired within one-hundred-eighty (180) days of the occurrence, the State may terminate this contract. A decision by the State to terminate the contract under this provision shall be communicated in writing to Concessionaire as soon as practicable. If the contract is so terminated, State shall be entitled to the proceeds payable under any applicable insurance policies pertaining to the loss as its interest may appear. Receipt of such proceeds by State shall be in addition to the right of State to pursue whatever other remedies it may have to recover any losses due to the occurrence. If the State determines not to terminate the contract, then, in State's discretion, any buildings, improvements, or fixtures built in replacement of any damaged or destroyed property shall be subject to the terms and provisions of this contract as if they had existed at the onset. In no event shall the provisions of this Section be deemed or construed to relieve Concessionaire from the requirement to repair or replace any damaged or destroyed property except as specifically excepted by express terms of this contract.

C. Each policy of liability insurance shall contain additional named insured endorsements in the name of the State of California, through its Department of Parks and Recreation, as to all insurable interests of the State including, but not limited to, the premises and all contents as follows:

1) State of California, its officers, employees, and servants are included as additional insured but only insofar as operations and facilities under this contract are concerned;

2) The insurer will not cancel or reduce the insured's coverage without thirty (30) days prior written notice to State.

D. No cancellation provision in any insurance policy shall diminish the responsibility of Concessionaire to furnish continuous insurance throughout the term of this contract. Each policy shall be underwritten to the satisfaction of the State. A signed certificate of insurance with each endorsement required shall be submitted to State at the time this contract is executed, showing that the required insurance has been obtained. Further, at least thirty (30) days prior to the

SAMPLE

expiration of any such policy, Concessionaire shall submit to State a signed and complete certificate of insurance with all endorsements required by this Section, showing to the satisfaction of State that such insurance coverage has been renewed or extended. Within fifteen (15) days of State's request, Concessionaire shall furnish State with a signed and complete copy of the required policy.

8. ALCOHOLIC BEVERAGES

Notwithstanding anything to the contrary, the sale of liquor, beer, or other alcoholic beverages on the Premises is expressly prohibited. Exception to this restriction may be allowed through the special event permit process, as approved by State.

9. CONSTRUCTION AND COMPLETION OF IMPROVEMENTS

A. Facility Improvement: At Concessionaire's sole cost and expense, Concessionaire shall be responsible for the design, construction, completion, and installation of facility improvements, décor, equipment, fixtures, and furnishings as described in the Concessionaire's "Facility Plan", incorporated herein and made part of this contract as **Exhibit E** within the first year of the contract. Implementation of the element will be as follows:

1) Plan Amendment: Within fourteen (14) days of the execution of this contract, Concessionaire shall meet with State to modify and amend the Facility Plan as is reasonable and necessary to meet the intention of the State for this concession operation and the mission of the Department.

2) Schematic Design: Within four (4) weeks of amending the Facility Plan, Concessionaire shall provide to State for its review and approval a Schematic Design. The State shall not unreasonably withhold such approval. The objective of the Schematic Design is to clearly define the Facility Plan as amended and should include a site plan, building floor plans, all building elevations, outline specification, floor area usage, and Preliminary Statement of Probable Construction Cost. If the State

SAMPLE

disapproves any element of the program statement, Concessionaire shall promptly submit to State all necessary modifications and revisions.

3) Design Development: Within four (4) weeks of State's approval of Concessionaire's Schematic Design, Concessionaire shall submit the Design Development for State's review and approval. The State shall not unreasonably withhold such approval. The objective of the Design Development is to define and describe all the important aspects of the Facility Plan project and should include the necessary details of each element of the Schematic Design to adequately convey key conditions of major improvements. In addition, the Design Development should include Reflected Ceiling Plans, Schedules, Structural Requirements, Plumbing, Mechanical, and Electrical Plans, Food Service Requirements, Color Boards, Material and Systems Specifications, and an updated Preliminary Statement of Probable Construction Cost. If the State disapproves any element of the Design Development, Concessionaire shall promptly submit necessary modifications and revisions.

4) Working Drawings: Within four (4) weeks of State's approval of Concessionaire's Design Development, Concessionaire shall submit Working Drawings for State's review and approval. The State shall not unreasonably withhold such approval. The objective of the Working Drawings is to set forth in detail the requirements for construction of the Facility Plan including bidding and contracting. At a minimum, the drawings should include all Design Development elements plus: complete documentation of quantities, qualities, and relationships of all work required to construct the Facility Plan; documentation of decisions made in the Design Development phase; all documentation needed for obtaining regulatory and State approvals; and the final Statement of Probable Construction Cost. If the State disapproves any drawings, plans or specifications, Concessionaire shall promptly submit necessary modifications and revisions. Once approved, the Working Drawings will be made a part of the Facility Plan and incorporated as **Exhibit E** in this

SAMPLE

contract. No changes or alterations shall be made to the approved Working Drawings without prior written approval of State.

B. Use of Consultants: Concessionaire shall employ licensed contractor(s) in the completion of all required construction work. Additionally, Concessionaire shall utilize professional contractors and consultants, including architects(s) and engineer(s), acting in accordance with the latest American Institute of Architects' standards of practice to develop comprehensive construction plans, including schematic design plans, design development plans, and working drawings, and to conduct independent inspections and monitoring of all construction. Concessionaire agrees to select contractors and consultants who are fully licensed to practice in the State of California and are acceptable to the State. However, in no event shall State be deemed to have control of or be responsible for Concessionaire's final hiring decisions, the day-to-day management of the project, or administration of contracts with contractors or consultants. Contracts between Concessionaire and any contractor or consultant must be approved in writing by State in advance of execution by Concessionaire.

C. State Approval/Acceptance of Plans and Work: State's approval of the work and plans shall be for the purpose of determining that such work conforms in scope and quality to State's policies and standards, and in no way shall relieve Concessionaire or its contractors or subcontractors of the responsibility to perform and complete the work (1) in accordance with generally accepted industry standards, (2) faithfully adhering to the approved plans, specifications, and drawings, and (3) in accordance with all applicable codes, laws, regulations, or other requirements, including but not limited to *The Secretary of the Interior's Standards for the Treatment of Historic Properties (The Standards) and The Secretary of the Interior's Guidelines for Preserving, Rehabilitating, Restoring, and Reconstructing Historic Buildings (The Guidelines). Additionally, all sub-surface work must be examined by a State approved archeological consultant at the proposer's expense prior to work being done*, and the standards contained in this contract.

SAMPLE

D. Permits: At its sole cost and expense, including mitigation costs, Concessionaire shall obtain all permits, licenses, and other approvals necessary for the construction and completion of the Facility Plan. Such permits may include, but are not limited to, those required under the California Environmental Quality Act (CEQA), Public Resources Code 5024, County Fire Department, California Coastal Act, California Building Code, and State Fire Marshal. Concessionaire shall reimburse State for all costs incurred by State on behalf of Concessionaire in association with acquisition of said permits. State will produce records of such costs for review by Concessionaire on a monthly basis. The State shall cooperate with Concessionaire with respect to securing said permits including the execution of documents required by a governmental authority to be initiated by State. In the event Concessionaire, having exercised all due diligence in applying for and seeking all approvals, cannot secure all required permits within two (2) years from Concessionaire's taking possession of the premises, the State shall have the option to terminate this contract.

E. Alterations: It is the intent of this contract and the contracting parties that the concession facilities contemplated herein shall not only be constructed in accordance with the requirements herein, but in coordination with State's development of the unit. The State, in its discretion after consultation with Concessionaire, may alter the Facility Plan and Working Drawings, and/or the construction timeline to agree with its schedule of development for the unit. Any changes to the timeline shall not be earlier than the dates set forth in the Working Drawings, as approved by State, except with concurrence of Concessionaire.

F. Completion of Improvements: Upon State approval of the Working Drawings and receipt of all required permits, licenses, and other approvals, Concessionaire shall commence improvements to the facility as described herein, and prosecute the same to completion with all due diligence and within **four (4) months.** Such time shall be extended as reasonably necessary in the event of delays caused by fire, earthquakes, wars, strikes, adverse weather, or other calamity beyond Concessionaire's control. Concessionaire shall hold monthly or more frequent status meetings throughout the period of construction,

SAMPLE

which shall include representatives of the general contractor, appropriate subcontractors, a representative of Concessionaire, and a representative of the State.

Upon completion of construction, Concessionaire shall (1) file a Notice of Completion of Construction with State; (2) provide State with a complete set of "as-built" plans for all improvements in a format acceptable to State; (3) submit evidence that all improvements are clear of any mechanic's liens; (4) have work certified by a licensed architect or engineer to be in compliance with the Working Drawings as approved by State and all applicable building or other laws, codes, or regulations; and (5) submit an account of the cost for all facility improvements, excluding equipment and trade fixtures that are the personal property of Concessionaire.

10. CONTRACT NOTICE

Any notices required to be given or that may be given by either party to the other shall be deemed to have been fully given when made in writing and deposited in the United States mail, postage prepaid, and addressed as follows:

Concessionaire at:	Concessionaire Address CityState Zip Phone
State at:	Department of Parks and Recreation San Diego Coast District 4477 Pacific Highway San Diego, CA 92110 (619) 688-3260
Copy to:	Department of Parks and Recreation Concessions, Reservations & Fees Division P.O. Box 942896 Sacramento, California 94296-0001 916-653-7733

SAMPLE

The address to which notices shall or may be mailed as aforesaid by either party shall or may be changed by written notice given by such party to the other, but nothing in this Section shall preclude the giving of any such notice by personal service.

11. RECORDS AND REPORTS

Concessionaire shall keep separate true and accurate books and records showing all of Concessionaire's business transactions under this contract in a manner that conforms to industry standards and practices and in a manner acceptable to State. Concessionaire shall keep all records for a period of at least four years.

In accordance with Public Resources Code Section 5080.18(b), copies of all sales and use tax returns submitted by Concessionaire to the California State Board of Equalization, the Employment Development Department, the Franchise Tax Board, or any other governmental agency shall be concurrently submitted to State.

In accordance with Public Resources Code Section 5080.18(c), State shall have the right through its representative and at all reasonable times to conduct such audits as it deems necessary and to examine and copy Concessionaire's books and records including all tax records and returns. Concessionaire hereby agrees to make all such records, books, and tax returns available to State upon State's request therefor. Concessionaire further agrees to allow interviews of any employees who might reasonably have information related to such records.

Concessionaire will submit to State, no later than May 1st of each year during the term of this contract, a verified profit and loss statement for the previous calendar year. Such statement shall be submitted on Form DPR 86, "Concessionaire's Financial Statement", attached hereto as **Exhibit G**, or in a format previously approved by the State, and shall contain an appropriate certification that all gross receipts during the yearly accounting period covered by said statement shall have been duly and properly reported to the State. Within forty-five (45) days of the expiration or termination of this contract, Concessionaire shall submit to the State a profit and loss statement for the period of operation not previously reported prepared in the manner stated above.

Concessionaire shall obtain and install cash registers or other accounting equipment acceptable to the State, through which Concessionaire shall record all gross

SAMPLE

receipts from the operation of the concession. This equipment shall be non-resetable and shall supply an accurate recording of all sales on tape and produce a receipt for each transaction. All such equipment shall have a customer display that is visible to the public. Concessionaire shall make all cash register tapes available to the State upon State's request. Concessionaire shall provide a cash register receipt to each customer setting forth the full amount of a sale.

12. GROSS RECEIPTS

The term "gross receipts", wherever used in this contract, is intended to and shall mean all moneys, property, or any other thing of value received by or owed to Concessionaire and any sub-concessionaire or operator, if other than Concessionaire, through or in connection with the operation of the concession, including any concession related business carried on through the internet or catalog sales, or from any other business carried on or in connection with the Premises, or from any other use of the Premises, and/or of any business of any kind that uses the names licensed by this contract, or that associates with or implies an endorsement by State, all without deduction. The term "gross receipts" shall not include any sales taxes imposed by any governmental entity and collected by Concessionaire.

13. RATES, CHARGES AND QUALITY OF GOODS AND SERVICES

Concessionaire shall staff, operate, manage, and provide all goods, services, and facilities offered in a first-class manner and comparable to other high quality concessions providing similar facilities and services. State reserves the right to prohibit or modify the sale or rental of any item, accommodation, or service for public safety and/or to ensure that the public receives, in the State's view, fair pricing, proper service, and appropriate quality. State reserves the right to prohibit the sale or use of non-recyclable containers or plastics. A competent person shall be on the premises at all times while the concession is in operation. If the on-site manager is other than the Concessionaire, State reserves the right to approve such manager.

SAMPLE

14. PERFORMANCE EVALUATIONS AND INSPECTION

As part of its administration of this contract, State will conduct periodic inspections of concession facilities, equipment, services, and programs and prepare written performance evaluations based upon its observations. A "Concessionaire Performance Rating" (DPR Form 531) attached hereto as **Exhibit H,** or other similar format(s) as may be adopted by the State will be utilized for evaluation purposes. State further reserves the right of ingress and egress without notice to inspect concession operations for the purposes of evaluating Concessionaire's performance of the terms and conditions of this contract; to inspect, investigate, and/or survey the Premises; and to do any work thereon of any nature necessary for preservation, maintenance, and operation of the State Park System. Concessionaire agrees to cooperate with State in all respects related to the implementation of State's Concession Performance Evaluation program and with State's activities on the Premises. State shall not be liable in any manner for any inconvenience, disturbance, loss of business, nuisance, or other damage arising out of State's entry in the Premises as provided herein, except damage resulting from the active negligence or willful misconduct of State or its authorized representatives.

15. HOLD HARMLESS AGREEMENT

Concessionaire hereby waives all claims and recourse against the State, including the right to contribution for loss or damage to persons or property arising from, growing out of, or in any way connected with or incident to this contract, except claims arising from, and to the extent of, the sole gross negligence or willful misconduct of the State, its officers, agents, or employees. Concessionaire shall protect, indemnify, hold harmless, and defend State, its officers, agents, and employees against any and all claims, demands, damages, costs, expenses, attorneys fees, expert costs and fees, or liability costs arising out of the development, construction, operation, or maintenance of the Premises property described herein and compliance with all laws, including but not limited to the Americans With Disabilities Act of 1990 as provided for herein, except for liability arising out of, and to the extent of, the sole gross negligence or willful

SAMPLE

misconduct of State, its officers, agents, or employees or other wrongful acts for which the State is found liable by a court of competent jurisdiction.

16. TAXES

A. By signing this contract, Concessionaire acknowledges that occupancy interest and rights to do business on state property being offered Concessionaire by this contract may create a possessory interest as that term is defined in Revenue and Taxation Code Section 107.6, which possessory interest may subject Concessionaire to liability for the payment of property taxes levied on such possessory interest.

B. Concessionaire agrees to pay all lawful taxes, assessments, or charges that at any time may be levied by the State, County, City, or any tax or assessment levying body upon any interest in or created by this contract, or any possessory right that Concessionaire may have in or to the premises covered hereby, or the improvements thereon by reason of Concessionaire's use or occupancy thereof or otherwise, as well as all taxes, assessments, and charges on goods, merchandise, fixtures, appliances, equipment, and property owned by Concessionaire in or about the Premises.

17. MODIFICATIONS, ADDITIONS, TITLE TO IMPROVEMENTS

In the event that Concessionaire desires to make modifications, improvements, or additions to the Premises or any part of the Premises, including changes to structural design, required accessibility barrier removal work, landscape design, or interior or exterior fixtures, design, and/or furnishings, (collectively "Alteration(s)"), the approval in writing of State shall be obtained prior to the commencement of any Alterations. State shall dictate the plan approval process.

The Premises as shown on Exhibit A include a state historic facility, as defined in Public Resources Code Section 5024. No alternation, modifications, demolition, or construction, other than those which may be outlined herein, may be commenced without prior written approval from State in accordance with Public Resources Code Section 5024.5.

SAMPLE

Once any Alteration has been approved by State and the work has begun, Concessionaire shall, with reasonable diligence, prosecute to completion all approved Alterations. All work shall be performed in a good and workmanlike manner, shall substantially comply with plans and specifications submitted to State as required herein, and shall comply with all applicable governmental permits, laws, ordinances, and regulations. It shall be the responsibility of Concessionaire, at its own cost and expense, to obtain all licenses, permits, and other approvals necessary for the construction of approved Alterations.

Title to all Alterations and improvements existing or hereafter erected on the Premises, regardless of who constructs such improvements, shall immediately become State's property and, at the end of the Term, shall remain on the Premises without compensation to Concessionaire. Concessionaire agrees never to assail, contest, or resist title to the Alterations and improvements. The foregoing notwithstanding, State may elect, by notice to Concessionaire, that Concessionaire must remove any Alterations that are peculiar to Concessionaire's use of the Premises and are not normally required or used by State and/or future occupants of the Premises. In this event, Concessionaire shall bear the cost of restoring the Premises to its condition prior to the installment of the Alterations.

18. PERSONAL PROPERTY

Except to the extent covered by Section 17, “Modifications, Additions, Title to Improvements”, title to all personal property provided by Concessionaire shall remain in Concessionaire. Concessionaire shall not attach any personal property to any building without first obtaining State’s written approval. Unless approved in writing by State, all property attached to real property will be considered a real property improvement and shall become property of State at the time this contract is terminated.

19. HOUSEKEEPING, MAINTENANCE, REPAIR AND REMOVAL

During the term of this contract at Concessionaire's own cost and expense, Concessionaire shall maintain and operate the Premises and areas in, on, or adjacent to a distance of not less than fifty (50) feet, including personal property and equipment,

SAMPLE

in a clean, safe, wholesome, and sanitary condition free of trash, garbage, or obstructions of any kind. Concessionaire shall remedy without delay any defective, dangerous, or unsanitary conditions.

A. Housekeeping: Housekeeping activities are defined as all those activities concerned with keeping facilities clean, neat, and orderly, and includes, but is not limited to, mowing, raking, sweeping, vacuuming, mopping, stripping, waxing, dusting, wiping, washing, hosing, and other general care or cleaning of interior and exterior floors, walls, ceilings, doors, windows, facility fixtures, and all adjacent grounds and walks. Concession housekeeping shall conform to California State Park standards.

B. Maintenance and Repairs: Concessionaire shall maintain all concession facilities and personal property and equipment on the Premises in good condition and repair at Concessionaire's sole cost and expense at all times during the term of this contract. Such maintenance shall conform to State Park standards in accordance with **Exhibit I**, Concession Maintenance Program. For the purposes of this contract, the term “maintenance” is defined as all repair and preservation work necessary to maintain concession facilities and personal property and equipment in a good state of repair, as well as to preserve them for their intended purpose for an optimum useful life.

Pest inspections shall be performed regularly. Concessionaire will remedy all pest infestations in a timely manner. Concessionaire shall provide to State copies of all pest inspection reports or other professional assessments of the condition of the facilities.

Should Concessionaire fail, neglect, or refuse to undertake and complete any required maintenance, State shall have the right to perform such maintenance or repairs for Concessionaire. In this event, Concessionaire shall promptly reimburse State for the cost thereof provided that State shall first give Concessionaire ten (10) days written notice of its intention to perform such maintenance or repairs. State shall not be obligated to make any repairs to or maintain any improvements on the Premises. Concessionaire hereby expressly waives the right to make repairs at the expense of State and the benefit of the

SAMPLE

provisions of Sections 1941 and 1942 of the Civil Code of the State of California relating thereto if any there be. State has made no representations respecting the condition of the Premises, except as specifically set forth in this contract.

C. Removal and Restoration. At the expiration or sooner termination of this contract, Concessionaire at its own expense shall remove all personal property brought onto the Premises by Concessionaire. Concessionaire, at Concessionaire's expense, shall restore and repair the Premises, and any of Concessionaire's improvements or fixtures remaining thereon, to a good, clean, safe, and fit condition, reasonable wear and tear excepted, and shall completely remedy all injuries to the Premises.

20. UTILITIES AND SERVICES

Concessionaire shall be responsible for all costs associated with the installation and provision of all utilities necessary to and used in connection with the Premises, including but not limited to sewage disposal. When installing facilities, no trees shall be trimmed or cut without permission of State. Removal and disposal of all rubbish, refuse, and garbage resulting from concession's operations shall be the Concessionaire's responsibility and shall be disposed of outside the park unit and in accordance with applicable laws and local ordinances. All trash containers and/or trash bins shall be adequately screened to the satisfaction of State.

21. RESOURCE CONSERVATION

A. Environmental Conservation Program: Concessionaire shall set a positive example in waste management and environmental awareness that shall lead to preservation of the resources of the State. Accordingly, Concessionaire shall prepare and execute a program, subject to the prior written approval of the State, designed to reduce environmental impacts that result from concession operations. This program shall address, but not be limited to: solid waste management, including reduction, reuse and recycling; water and energy conservation, pest management, grease removal and disposal, hazardous

SAMPLE

materials handling and storage, and air quality. Specifically, the program must include the following:

1) Recycling and Beverage Container Programs: The Concessionaire shall implement a source reduction and recycling program designed to minimize concession and patron use of disposable products, per Public Contract Codes Sections 12161 and 12200 et seq. Reusable and recyclable products are preferred over "throwaways". Where disposable products are needed, products that have the least impact on the environment will be selected. No Styrofoam containers or other non-biodegradable containers are to be used or sold by Concessionaire. The use of "post-consumer" recycled products is encouraged wherever possible.
The Concessionaire shall participate fully in the California beverage container redemption/recycling program. Products to be recycled include, but are not limited to, paper, newsprint, cardboard, bimetal, plastics, aluminum and glass. At the start of each contract year, Concessionaire and State shall review items sold, and containers or utensils used or dispensed by Concessionaire, and, whenever possible, eliminate the use of non-returnable or non-recyclable containers or plastics.

2) Water and Energy Conservation: The Concessionaire shall implement water and energy conservation measures. As new technologies are developed, Concessionaire shall explore the possibility of integrating them into existing operations where there is potential for increased efficiency, reduced water or energy consumption, and/or reduced impacts on the environment.

3) Erosion Control/Water Quality/Environmental Sensitivity: The Concessionaire shall comply with all requirements set forth by various oversight agencies that have jurisdiction and oversight authority relating to the Premises and surrounding properties, including, but not limited to, erosion control, water quality and environmental sensitivity standards.

B. Resource Management and Preservation: Concessionaire shall comply with State's resource management and preservation mandates in the conduct of

SAMPLE

all activities that impact cultural, natural, or scenic resources. These mandates include the Public Resources Code Sections 5024 and 5097 et seq. the Department's Resource Management Directives and the Secretary of the Interior's Guidelines for Historic Preservation.

C. Air and Water Pollution Violation: Under State laws, Concessionaire shall not be (1) in violation of any order or resolution not subject to review promulgated by the State Air Resources Board or an air pollution control district; (2) subject to cease and desist order not subject to review issued pursuant to Section 13301 of the Water Code for violation of waste discharge requirements or discharge prohibitions; or (3) finally determined to be in violation of provisions of federal law relating to air or water pollution.

22. HAZARDOUS SUBSTANCES

A. Use of Premises: On the Premises, Concessionaire shall not:

1) Keep, store, or sell any goods, merchandise, or materials that are in any way explosive or hazardous;

2) Carry-on any offensive or dangerous trade, business, or occupation;

3) Use or operate any machinery or apparatus that shall injure the premises or adjacent buildings in any way; or

4) Do anything other than is provided for in this contract.

5) Nothing in this Section shall preclude Concessionaire from bringing, keeping, or using on or about said premises such materials, supplies, equipment, and machinery as is appropriate or customary in carrying-on Concessionaire's business.

6) Gasoline, oil, and other materials considered under law or otherwise to be hazardous to public health and safety shall be stored, handled, and dispensed as required by present or future regulations and laws.

B. Storage of Hazardous Materials: Concessionaire shall comply with all applicable laws and best practices pertaining to the use, storage, transportation,

SAMPLE

and disposal of hazardous substances. Concessionaire shall protect, indemnify, defend, and hold harmless the State or any of its affiliates, successors, principals, employees, or agents against any liability, cost, or expense, including attorney's fees and court costs, arising from illegal use, storage, transportation, or disposal of any hazardous substance, including any petroleum derivative, by Concessionaire. Where Concessionaire is found to be in breach of this provision due to the issuance of a government order directing Concessionaire to cease and desist any illegal action in connection with a hazardous substance, or to remediate a contaminated condition directly caused by Concessionaire or any person acting under Concessionaire's direct control or authority, Concessionaire shall be responsible for all cost and expense of complying with such order, including any and all expenses imposed on or incurred by the State in connection with or in response to such government order. Notwithstanding the foregoing, in the event a government order is issued naming Concessionaire, or Concessionaire incurs any liability during or after the term of the contract in connection with contamination that preexisted the Concessionaire's obligations and occupancy under this contract or prior contracts, or that were not directly caused by Concessionaire, the State shall be solely responsible as between Concessionaire and the State for all expenses and efforts in connection therewith, and State shall reimburse Concessionaire for all reasonable expenses actually incurred by Concessionaire therewith.

C. Certification: Upon termination of this contract, when requested by State, Concessionaire shall provide certification prepared by a Certified Industrial Hygienist that there is no hazardous waste contamination and/or damage to the Premises.

D. Pest Control Activities: All pest control activities, chemical and non-chemical, shall be approved by the State prior to action by the Concessionaire. Concessionaire, or the pest control business acting on behalf of Concessionaire, shall submit a DPR 191, "Pest Control Recommendation" (or equivalent) to the State for approval. The State has fourteen (14) days to approve or deny the request. Such approval shall be solely for compliance with State's policies and in

SAMPLE

no way shall relieve Concessionaire or its contractors, employees, agents or representatives from compliance with all laws and regulations concerning such activities and from carrying out the work in a workmanlike manner. Concessionaire, or the pest control business acting on behalf of Concessionaire, shall submit a report of completed work for each pest management action to the State no later than seven (7) days after performance of the work. The report may be submitted on a DPR 191, "Pest Control Recommendation" (or equivalent information).

23. EQUIPMENT

Concessionaire, at Concessionaire's own expense, shall completely equip the concession improvements described herein and shall keep the same equipped in a safe and first-class manner throughout the term of this contract.

24. SIGNS AND ADVERTISING

No signs, logos, names, placards, or advertising matter shall be inscribed, painted, or affixed upon Premises, circulated, or published, including electronically or on the internet, without prior written consent of the State and only consistent with the purposes of the contract. To the extent possible, signs and advertising shall conform to A Guideline for Signs.

25. PHOTOGRAPHY

State may grant permits to persons or corporations engaged in the production of still and motion pictures and related activities for the use of the Premises for such purposes when such permission shall not interfere with the primary business of Concessionaire. Such permits shall not be deemed to be a competitive activity with regard to Concessionaire's rights to possession and operation under this contract.

26. INTELLECTUAL PROPERTY RIGHTS

Any names, logos, and/or trademarks developed during and/or pursuant to this contract that will in any way associate with, identify, or implicate an affiliation with California State Parks shall be approved by State, but, whether or not so approved, shall be

SAMPLE

deemed to have been developed pursuant to this contract and licensed hereunder to Concessionaire for the term of this contract only; shall belong to State upon creation; and shall continue in State's exclusive ownership upon termination of this contract, and all goodwill and other rights in said marks shall inure to the benefit of the State as the mark owner. Further, any original works of authorship in which copyright resides, and any other proprietary rights, including without limitation trade secrets and know-how, which are developed during and/or pursuant to this contract, shall be deemed to be works made for hire in consideration of Concessionaire's rights and benefits hereunder, or alternatively Concessionaire agrees to assign such copyrights to the State, and shall be owned by the State; shall belong to State upon creation; and shall continue in State's exclusive ownership upon termination of this contract. These works shall include, but are not limited to, all drawings, designs, reports, specifications, notes, and other work developed in the performance of this contract. Further, Concessionaire shall deliver to the State upon request the disk or tape that contains the design or other such files containing such information, and shall specify the supplier of the software and hardware necessary to use the files of any work that is performed with the assistance of Computer Aided Design and Drafting Technology. Concessionaire intends and agrees to assign to State all right, title, and interest in and to such materials, as well as all related copyrights and other proprietary rights therein, unless otherwise agreed to in writing. Concessionaire warrants that it has the full right, power, and authority over and is the sole exclusive owner of all tangible and intangible property deliverable to State in connection with this contract and that title to such materials conveyed to State shall be delivered free and clear of all claims, liens, charges, judgments, settlement, encumbrances, or security interests.

Concessionaire agrees not to incorporate into or make any deliverables dependent upon any original works of authorship or Intellectual Property Rights of third parties without first (i) obtaining State's prior written permission, and (ii) granting to or obtaining for State a nonexclusive, royalty-free, paid-up, irrevocable, perpetual, world-wide license to use, reproduce, sell, modify, publicly and privately perform, publicly and privately display and distribute any such prior works for any purpose whatsoever.

SAMPLE

Concessionaire further warrants that all deliverables do not infringe or violate any patent, copyright, trademark, trade secret, or any other intellectual property rights of any person, entity, or organization. Concessionaire agrees to execute any documents reasonably requested by State in connection with securing State's registration of patent and/or copyrights, or any other statutory protection in such work product, including an assignment of copyright, in all deliverables. Concessionaire further agrees to incorporate these provisions into all of its contracts with architects, engineers, and other consultants or contractors.

Concessionaire, at its sole expense, shall hold harmless, protect, defend, and indemnify State against any infringement action and/or dispute brought by a third party in connection with any deliverable hereunder. Concessionaire shall pay all costs, expenses, losses and damages, judgments and claims including reasonable attorney's fees, expert witness fees and other costs.

27. PARTICIPATION IN STATE PARK MARKETING PROGRAMS

Concessionaire acknowledges that the State has an established advertising and marketing program designed to promote additional revenue for the State and to deliver a consistent and positive image to the public, and Concessionaire agrees to participate in this program in the manner described below without compensation from the State for such cooperation.

A. Concessionaire agrees to honor all statewide graphic standards, licensing, and merchandising agreements entered into with corporate sponsors of the Department of Parks and Recreation.

B. Concessionaire agrees to place on the Premises any advertising that the State approves under this program. Any advertising approved by the State under this program will be placed at State's expense.

Concessionaire agrees to rent or sell, along with all other items of merchandise that are part of the Concessionaire's normal and customary inventory, any item of merchandise that the State approves under this program, provided that Concessionaire is authorized to sell or rent it under the terms of the contract, and the Concessionaire receives reasonable compensation for its sale.

SAMPLE

28. DEFAULT BY CONCESSIONAIRE

A. Defaults: The occurrence of any one of the following shall constitute a default and breach of this contract by Concessionaire:

1) Failure to Pay Rent: Any failure of Concessionaire to timely pay any rent due or any other monetary sums required to be paid hereunder where such failure continues for a period of ten (10) consecutive days after such sums are due.

2) Absence from Premises: Any complete absence by Concessionaire or its agents and employees from the Premises for thirty (30) consecutive days or longer. The Premises shall be deemed abandoned after State has followed the procedures set forth in Civil Code Section 1951.3.

3) Nuisance: Should Concessionaire create or allow to be created a nuisance on the Premises, State may declare an immediate event of default and enter upon and take possession and/or demand an assignment of the right to operate the Premises without notice to Concessionaire. Concessionaire shall immediately vacate the Premises and remove all personal property within thirty (30) days after State's declaration of default.

4) Failure to Observe Other Provisions: Any failure by Concessionaire to observe or perform another provision of this contract where such failure continues for twenty (20) consecutive days after written notice thereof by State to Concessionaire; this notice shall be deemed to be the notice required under California Code of Civil Procedure Section 1161. However, if the nature of Concessionaire's default is such that it cannot reasonably be cured within the twenty (20) day period, Concessionaire shall not be deemed to be in default if it is determined at the sole discretion of State that Concessionaire has commenced such cure within the twenty (20) day period and thereafter continues to diligently prosecute such cure to completion to the satisfaction of State.

SAMPLE

5) Involuntary Assignments, Bankruptcy: State and Concessionaire agree that neither this contract nor any interest of Concessionaire hereunder in the Premises shall be subject to involuntary assignment or transfer by operation of law in any manner whatsoever, including, without limitation, the following: (a) transfer by testacy or intestacy; (b) assignments or arrangements for the benefit of creditors; (c) levy of a writ of attachment or execution on this contract; (d) the appointment of a receiver with the authority to take possession of the Premises in any proceeding or action in which Concessionaire is a party; or (e) the filing by or against Concessionaire of a petition to have Concessionaire adjudged a bankrupt, or of a petition for reorganization or arrangement under any law relating to bankruptcy. Any such involuntary assignment or transfer by operation of law shall constitute a default by Concessionaire and State shall have the right to elect to take immediate possession of the Premises, to terminate this contract and/or invoke other appropriate remedies as set forth below, in which case this contract shall not be treated as an asset of Concessionaire.

B. Notices of Default: Notices of default shall specify the alleged default and the applicable contract provision and shall demand that Concessionaire perform the provisions of this contract within the applicable time period or quit the Premises. No such notice shall be deemed a forfeiture or a termination of this contract unless State specifically so states in the notice.

29. STATE'S REMEDIES

In the event of default by Concessionaire, State shall have the following remedies. These remedies are not exclusive; they are cumulative and are in addition to any other right or remedy of State at law or in equity.

A. Collection of Rent: In any case where State has a cause of action for damages, State shall have the privilege of splitting the cause to permit the institution of a separate suit for rent due hereunder, and neither institution of any suit, nor the subsequent entry of judgment shall bar State from bringing another

SAMPLE

suit for rent; it being the purpose of this provision to provide that the forbearance on the part of State in any suit or entry of judgment for any part of the rent reserved under this contract, to sue for, or to include in, any suit and judgment the rent then due, shall not serve as defense against, nor prejudice a subsequent action for, rent or other obligations due under the contract. The claims for rent may be regarded by State, if it so elects, as separate claims capable of being assigned separately.

B. Maintain Contract in Effect: The State has the remedy described in California Civil Code 1951.4 (lessor may continue lease in effect after lessee's breach or abandonment and recover rent as it becomes due, if lessee has right to sublet or assign, subject only to reasonable limitations). The following do not constitute a termination of the Concessionaire's right to possession: (1) Acts of maintenance or preservation or efforts to relet the Premises; (2) The appointment of a receiver upon initiative of the State to protect State's interests under the contract; (3) Withholding consent to a subletting or assignment so long as such consent is not unreasonably withheld.

C. Continued Performance: At State's option, Concessionaire shall continue with its responsibilities under this contract during any dispute.

D. Termination of Concessionaire's Right to Possession: Upon an event of default, State may terminate Concessionaire's right to possession of the Premises at any time by written notice to Concessionaire. In the absence of such written notice from State, no act by State, including, but not limited to, acts of maintenance, efforts to relet and/or assign rights to possession of the Premises, or the appointment of a receiver on State's initiative to protect State's interest under this contract shall constitute an acceptance of Concessionaire's surrender of the Premises, or constitute a termination of this contract or of Concessionaire's right to possession of the Premises. Upon such termination, State has the right to recover from Concessionaire:

1) the worth, at the time of the award, of the unpaid rent that had been earned at the time of termination of this contract;

SAMPLE

2) the worth, at the time of the award, of the amount by which the unpaid rent that would have been earned after the date of termination of this contract until the time of the award exceeds the amount of loss of rent that Concessionaire proves could have reasonably been avoided;

3) the worth, at the time of the award, of the amount by which the unpaid rent for the balance of the term after the time of the award exceeds the amount of the loss of rent that Concessionaire proves could have been reasonably avoided; and

4) any other amount necessary to compensate State for all the detriment proximately caused by Concessionaire's failure to perform its obligations under this contract, which, without limiting the generality of the foregoing, includes any cost and expenses incurred by the State in recovering possession of the Premises, in maintaining or preserving the Premises after such default, in preparing the Premises for a new concessionaire, in making any repairs or alterations to the Premises necessary for a new concessionaire, in making any repairs or alterations to the Premises, and costs of clearing State's title of any interest of Concessionaire, commissions, attorneys' fees, architects' fees, and any other costs necessary or appropriate to make the Premises operational by a new concessionaire.

"The worth, at the time of the award," as used herein above shall be computed by allowing interest at the lesser of a rate of ten percent (10%) per annum or the maximum legal rate.

E. Assignment at State's Direction: In the event of a default by Concessionaire, when cure is not received and acknowledged by State after having provided notice of the breach as provided herein above, Concessionaire shall, in addition to the damages provided for herein, be obligated to assign all rights to occupy, possess, and operate on and in the Premises to State's designee within thirty (30) days of receipt of written demand by State. Concessionaire shall further remove itself and its personal property from the Premises within the same time frame. Concessionaire agrees to execute all

SAMPLE

documents necessary to effectuate and implement this provision. Upon such assignment, all rights of Concessionaire under the contract shall transfer to the assignee.

Any designated assignee, as provided for herein, shall take and operate the concession under the same terms and conditions as those set forth herein, except for requirements that have already been performed and are no longer applicable. However, Concessionaire shall not be relieved of obligations incurred. An assignment of the contract pursuant to the terms hereof shall not cause the contract to terminate and shall not work a merger.

F. Receiver: If Concessionaire is in default of this contract, State shall have the right to have a receiver appointed to collect rent and conduct Concessionaire's business or to avail itself of any other pre-judgment remedy. Neither the filing of a petition for the appointment of a receiver nor the appointment itself shall constitute an election by State to terminate this contract.

G. Right to Cure Concessionaire's Default: At any time after Concessionaire commits a default, State can cure the default at Concessionaire's cost. If State, at any time by reason of Concessionaire's default, pays any sum or does any act that requires the payment of any sum, the sum paid by State shall be due immediately from Concessionaire to State, and if paid at a later date shall bear interest at the rate of ten percent (10%) per annum from the date the sum is paid by State until State is reimbursed by Concessionaire. Any such sum shall be due as additional rent.

H. Personal Property of Concessionaire: In the event any personal property or trade fixtures of Concessionaire remain at the Premises after State has regained possession or after an assignment is accomplished, that property or those fixtures shall be dealt with in accordance with the provisions for Surrender of the Premises provided below.

1) State's Obligations After Default: State shall be under no obligation to observe or perform any covenant of this contract on its part to be observed or performed that accrues after the date of any default by Concessionaire. Such nonperformance by State shall not constitute a

SAMPLE

termination of Concessionaire's right to possession nor a constructive eviction.

2) No Right of Redemption: Concessionaire hereby waives its rights under California Code of Civil Procedure Sections 1174 and 1179 or any present or future law that allows Concessionaire any right of redemption or relief from forfeiture in the event State takes possession of the Premises by reason of any default by Concessionaire.

3) Other Relief: All monetary obligations of the Concessionaire of any kind shall be considered rent. State shall have such rights and remedies for failure to pay such monetary obligations as State would have if Concessionaire failed to pay rent due. The remedies provided in this contract are in addition to any other remedies available to State at law, in equity, by statute, or otherwise.

4) No Buy-out: In accordance with Public Resources Code Section 5080.18 (h), where the contract has been terminated due to a breach on the part of the Concessionaire under any terms of this contract the State shall not be obligated to purchase any improvements made by Concessionaire or to pay the Concessionaire for said improvements before or after taking possession of the Premises.

30. DEFAULT BY STATE

State shall not be in default of the performance of any obligation required of it under this contract unless and until it has failed to perform such obligation for more than thirty (30) days after written notice by Concessionaire to State specifying the alleged default and the applicable contract provision giving rise to the obligation. However, if the nature of State's obligation is such that more than thirty (30) days is required for its performance, then State shall not be deemed in default if it shall commence performance within such 30-day period and thereafter diligently prosecute the same to completion.

31. STATE BUY-OUT PROVISIONS

A. Notwithstanding any other provision in this contract and in addition to any other remedy available to State, upon twelve (12) months written notice, State

SAMPLE

shall have the option to terminate the contract and to pay Concessionaire the then depreciated cost of the facilities placed, created, or developed by Concessionaire on the Premises.

B. It is expressly understood that this Section does not apply to the situation where the State may terminate this contract for any breach on the part of the Concessionaire under Section 28, "Default By Concessionaire", or where the contract is terminated at Concessionaire's request. Where there has been a breach on the part of the Concessionaire, under any terms of this contract, the State shall not be obligated to pay the Concessionaire before or after taking possession of the Premises.

In the event of breach, bankruptcy, insolvency, abandonment, or the contract is terminated at Concessionaire's request, the buy-out provisions contained herein are not to be considered as an obligation of the State.

C. For the purposes of this Section, such facilities shall be deemed to be the structures Concessionaire is expressly required to construct, create, or develop under Section 9, "Construction and Completion of Improvements", or later adds, exclusive of Concessionaire's personal property. The cost of such facilities for the purposes of this Section shall be those values established under Section 9 (e), "Construction and Completion of Improvements", above.

D. The amount to be paid as the then depreciated cost of the facilities in the event of termination under this Section shall be based on a 10 percent (10%), ten (10) year capital recovery schedule, which shall provide one thousand six hundred twenty seven dollars ($1,627) for each ten thousand dollars ($10,000) of beginning cost, multiplied by the remaining years of the contract.

E. In the event there is an assignment of this contract for security and as consented to by State, then any payments made pursuant to this Section shall be used to satisfy such assignee to the extent of assignee's interest.

F. This Section shall only be operative when funds required by State for such buy-out are lawfully available to State, either through appropriation by the Legislature and through the normal budgeting processes of the State or otherwise.

SAMPLE

32. SURRENDER OF THE PREMISES; HOLDING OVER

A. Surrender: On expiration or within thirty (30) days after earlier termination of the contract, Concessionaire shall surrender the Premises to State with all fixtures, improvements, and Alterations in good condition, except for fixtures, improvements, and Alterations that Concessionaire is obligated to remove. Concessionaire shall remove all of its personal property and shall perform all restoration required by the terms of this contract within the above stated time unless otherwise agreed to in writing.

1) Personal Property: All of Concessionaire's personal property remaining on the Premises beyond such time specified in this Section shall be dealt with in accordance with California Code of Civil Procedure Section 1174 and California Civil Code Sections 1980, or such other laws as may be enacted regarding the disposition of Concessionaires' property remaining at the Premises. Concessionaire waives all claims against State for any damage to Concessionaire resulting from State's retention or disposition of Concessionaire's personal property. Concessionaire shall be liable to State for State's costs in storing, removing, and disposing of Concessionaire's personal property or trade fixtures.

2) Failure to Surrender. If Concessionaire fails to surrender the Premises to State on the expiration, assignment, or within thirty (30) days after earlier termination of the term as required by this Section, Concessionaire shall hold State harmless for all damages resulting from Concessionaire's failure to surrender the Premises.

B. Holding Over: After the expiration or earlier termination of the term and if Concessionaire remains in possession of the Premises with State's express consent, such possession by Concessionaire shall be deemed to be a temporary tenancy terminable on thirty (30) days written notice given at any time by either party. During such temporary tenancy, the Minimum Rent shall be increased by 10% over the Minimum Rent of the last year prior to the expiration or earlier termination of the contract and in addition to any changes as the result of

SAMPLE

Consumer Price Index adjustments required by this contract in accordance with Section 4, “Rent”, unless otherwise agreed to in writing by State. Concessionaire shall pay such rent and all other sums required to be paid hereunder monthly on or before the fifteenth day of each month. All other provisions of this contract except those pertaining to the term shall apply to the month-to-month tenancy.

33. NO RECORDATION; QUITCLAIM

A. No Recordation: This contract shall not be recorded.

B. Quitclaim**:** Concessionaire shall execute and deliver to State on the expiration or termination of this contract immediately on State's request, a quitclaim deed to the Premises and the rights arising hereunder, in recordable form or such other document as may be necessary, to remove any claim of interest of Concessionaire in and to all property belonging to the State. Should Concessionaire fail or refuse to deliver to State a quitclaim deed or other documents as aforesaid, a written notice by State reciting the failure of the Concessionaire to execute and deliver said quitclaim deed as herein provided, shall after ten (10) days from the date of recordation of said notice be conclusive evidence against the Concessionaire and all persons claiming under Concessionaire of the termination of this contract.

34. ATTORNEYS FEES

Concessionaire shall reimburse the State on demand for all reasonable attorney fees (including attorneys fees incurred in any bankruptcy or administrative proceeding or in any appeal) and expenses incurred by State as a result of a breach or default under this contract. If Concessionaire becomes the prevailing party in any legal action brought by State, Concessionaire shall be entitled to recover reasonable attorney fees and expenses incurred by Concessionaire and need not reimburse the State for any attorney fees and expenses incurred by the State.

35. COMPLIANCE WITH LAWS, RULES, REGULATIONS AND POLICIES

Concessionaire shall comply with all applicable laws, rules, regulations, and orders existing during the term of this contract, including obtaining and maintaining all

SAMPLE

necessary permits and licenses. Concessionaire acknowledges and warrants that it is or will make itself through its responsible concession managers, knowledgeable of all pertinent laws, rules, ordinances, regulations, or other requirements having the force of law affecting the operation of the concession facilities, including but not limited to laws affecting health and safety, hazardous materials, pest control activities, historic preservation, environmental impacts, and State building codes and regulations.

36. NONDISCRIMINATION

During the performance of this contract, Concessionaire and its employees shall not unlawfully discriminate, harass, or allow harassment against any employee, applicant for employment, or any member of the public because of sex, sexual orientation, race, color, religious creed, marital status, need for family and medical care leave, ancestry, national origin, medical condition (cancer/genetic characteristics), age (40 and above), disability (mental and physical) including HIV and AIDS, need for pregnancy disability leave, or need for reasonable accommodation. Concessionaire shall ensure that the evaluation and treatment of their employees and applicants for employment are free from such discrimination and harassment.

For contracts over $100,000 in goods and services per year, executed or amended after January 1, 2007, the Concessionaire certifies compliance with Public Contract Code Section 10295.3 concerning domestic partners.

Further, as part of compliance with the foregoing, Concessionaire and Concessionaire's employees shall not discriminate by refusing to furnish any person any accommodation, facility, service, or privilege offered to or enjoyed by the general public. Nor shall Concessionaire or Concessionaire's employees publicize the accommodation, facilities, services, or privileges in any manner that would directly or inferentially reflect upon or question the acceptability of the patronage of any such person.

Concessionaire shall comply with the provisions of the Fair Employment and Housing Act (Government Code Section12900 et seq.) and the applicable regulations promulgated thereunder (California Code of Regulations, title 2, Section 7285.0 et seq.). The applicable regulations of the Fair Employment and Housing Commission implementing Government Code, Section 12990 (a)-(f), are incorporated into this

SAMPLE

contract by reference and made a part hereof as if set forth in full (California Code of Regulations, title 2, Section 7285.0 et seq.). Concessionaire shall give written notice of their obligations under this clause to labor organizations with which they have a collective bargaining or other agreement. Concessionaire shall include the non-discrimination and compliance provisions of this clause in all contracts to perform work under and/or in connection with this contract.

In the event of violation of this Section, the State will have the right to terminate this contract, and any loss of revenue sustained by the State by reason thereof shall be borne and paid for by the Concessionaire.

37. DISABILITIES ACCESS LAWS

Without limiting Concessionaire's responsibility under this contract for compliance with all laws, with regard to all operations and activities that are the responsibility of Concessionaire under this contract, Concessionaire shall be solely responsible for complying with the requirements of the Americans With Disabilities Act of 1990 ("ADA") [Public Law 101-336, commencing at Section 12101 of Title 42, United States Code (and including Titles I, II, and III of that law)], the Rehabilitation Act of 1973, and all related regulations, guidelines, and amendments to both laws.

With regard to facilities for which Concessionaire is responsible for operation, maintenance, construction, restoration, or renovation under this contract, Concessionaire also shall be responsible for compliance with Government Code Section 4450, et seq., Access to Public Buildings by Physically Handicapped Persons, and Government Code Section 7250, et seq., Facilities for Handicapped Persons, and any other applicable laws. Written approval from State is required prior to implementation of any plans to comply with accessibility requirements.

38. EXPATRIATE CORPORATIONS

Concessionaire hereby declares that it is not an expatriate corporation or subsidiary of an expatriate corporation within the meaning of Public Contract Code Section 10286 and 10286.1 and is eligible to contract with the State.

SAMPLE

39. DRUG-FREE WORKPLACE

Concessionaire agrees to comply with Government Code Section 8355 in matters relating to the provision of a drug-free workplace. This compliance is evidenced by the executed Standard Form 21 entitled "Drug-Free Workplace Certification", **Exhibit J,** attached hereto and made a part of the contract.

40. NATIONAL LABOR RELATIONS BOARD CERTIFICATION

The Concessionaire, by signing this contract, does hereby swear, under penalty of perjury, that no more than one final, unappealable finding of contempt of court by a Federal Court has been issued against Concessionaire within the two-year period immediately preceding the date of this contract because of Concessionaire's failure to comply with a Federal Court order that Concessionaire shall comply with an order of the National Labor Relations Board.

41. CHILD SUPPORT COMPLIANCE ACT

In the event the annual gross income generated as a result of this contract shall exceed One Hundred Thousand Dollars ($100,000.00), Concessionaire acknowledges that:

A. The Concessionaire recognizes the importance of child and family support relating to child and family support enforcement, including, but not limited to, disclosure of information and compliance with earnings assignment orders, as obligations and shall fully comply with all applicable state and federal laws provided in Chapter 8 (commencing with Section 5200) of Part 5 of Division 9 of the Family Code; and

B. The Concessionaire to the best of its knowledge is fully complying with the earnings assignment orders of all employees and is providing the names of all new employees to the New Hire Registry maintained by the California Employment Development Department.

SAMPLE

42. EMPLOYEE TRAINING

All concession employees shall receive training to include an orientation on the State Park System, the history of Old Town San Diego, and local points of interest, provided by Concessionaire. Such orientation shall be sufficient to permit concession employees to reply adequately to inquiries from the visiting public. Training also shall include job or task-specific training necessary to ensure high-quality job performance and accessibility in a manner consistent with the protection of the State Park System and its visitors. Concessionaire's Employee Training/Orientation Program is subject to approval by the State.

43. CONFLICT OF INTEREST

Concessionaire warrants and covenants that no official, employee in the state civil service, other appointed state official, or any person associated with same by blood, adoption, marriage, cohabitation, and/or business relationship: (a) has been employed or retained to solicit or aid in the procuring of this contract; (b) will be employed in the performance of this contract without the immediate divulgence of such fact to State. In the event State determines that the employment of any such official, employee, associated person, or business entity is not compatible, Concessionaire shall terminate such employment immediately. For breaches or violation of this Section, State shall have the right both to annul this contract without liability and, in its discretion, recover from the Concessionaire the full amount of any compensation paid to such official, employee, or business entity.

44. WAIVER OF CLAIMS

The Concessionaire hereby waives any claim against the State of California, its officers, agents, or employees for damage or loss caused by any suit or proceeding directly or indirectly attacking the validity of this contract or any part thereof, or by any judgment or award in any suit or proceeding declaring this contract null, void, or voidable, or delaying the same or any part thereof from being carried out.

SAMPLE

45. WAIVER OF CONTRACT TERMS

Unless otherwise provided by this contract, no waiver by either party at any time of any of the terms, conditions, or covenants of this contract shall be deemed as a waiver at any time thereafter of the same or of any other term, condition, or covenant herein contained, nor of the strict and prompt performance thereof. No delay, failure, or omission of the State to re-enter the Premises or to exercise any right, power, privilege, or option arising from any breach, nor any subsequent acceptance of rent then or thereafter accrued shall impair any such right, power, privilege, or option or be construed as a waiver of such breach or a relinquishment of any right or acquiescence therein. No notice to the Concessionaire shall be required to restore or revive time as of the essence after the waiver by the State of any breach. No option, right, power, remedy, or privilege of the State shall be construed as being exhausted by the exercise thereof in one or more instances. The rights, powers, options, and remedies given to the State by this contract shall be deemed cumulative.

46. INTERPRETATION OF CONTRACT

This contract is made under and is subject to the laws of the State of California in all respects as to interpretation, construction, operation, effect, and performance.

47. DURATION OF PUBLIC FACILITIES

By entering into this contract, State makes no stipulation as to the type, size, location, or duration of public facilities to be maintained at this unit, or the continuation of State ownership thereof, nor does the State guarantee the accuracy of any financial or other factual representation that may be made regarding this concession.

48. TIME OF ESSENCE

Time shall be of the essence in the performance of this contract.

SAMPLE

49. EMINENT DOMAIN

If, during the term of this contract, any property described herein or hereinafter added hereto is taken in eminent domain, the entire award shall be paid to State.

50. TEMPORARY TENANCY

This tenancy is of a temporary nature and the parties to this contract agree that no Relocation Payment or Relocation Advisory Assistance will be sought or provided in any form as a consequence of this tenancy.

51. SECTION TITLES

The Section titles in this contract are inserted only as a matter of convenience and for reference, and in no way define, limit, or describe the scope or intent of this contract, or in any way affect this contract.

52. CONTRACT IN COUNTERPARTS

This contract may be executed in counterparts, each of which shall be deemed an original.

53. INDEPENDENT CONTRACTOR

In the performance of this contract, Concessionaire and the agents and employees of Concessionaire shall act in an independent capacity and not as officers or employees or agents of the State.

54. ASSIGNMENTS AND SUBCONCESSIONS

No transfer, assignment, or corporate sale or merger by the Concessionaire that affects this contract or any part thereof or interest therein directly or indirectly, voluntarily or involuntarily, shall be made unless such transfer, assignment, or corporate merger or sale is first consented to in writing by State. Before State considers such assignment, evidence must be given to State that the proposed assignee qualifies as a "best responsible bidder" under the terms of Section 5080.05 of the Public Resources Code or “best responsible person or entity submitting a proposal” under the terms of

SAMPLE

Section 5080.23 of the Public Resources Code and the Bid Prospectus or Request for Proposals under which this contract was awarded and executed. To be effective, any such assignment must comply with applicable law including, without limitation on generality, Public Resources Code Sections 5080.20 and 5080.23.

55. MODIFICATION OF CONTRACT

This concession contract contains and embraces the entire agreement between the parties hereto and neither it, nor any part of it, may be changed, altered, modified, limited, or extended orally or by any agreement between the parties unless such agreement be expressed in writing, signed, and acknowledged by the State and the Concessionaire or their successors in interest.

An amendment is required to change the Concessionaire's name as listed in this contract upon receipt of legal documentation to support such change. Notwithstanding any of the provisions of this contract, the parties may hereafter, by mutual consent expressed in writing, agree to modifications thereof, additions thereto, or terminations thereof, which are not forbidden by law. Such written modifications or additions to this contract shall not be effective until signed and acknowledged by the State and Concessionaire and approved in writing by the Department of General Services and the Attorney General of the State of California. The State shall have the right to grant reasonable extensions of time to Concessionaire for any purpose or for the performance of any obligation of Concessionaire hereunder.

56. UNENFORCEABLE PROVISION

In the event that any provision of this contract is unenforceable or held to be unenforceable, then the parties agree that all other provisions of this contract have force and effect and shall not be effected thereby.

57. APPROVAL OF CONTRACT

This contract, amendments, modifications, or termination thereof shall not be effective until approved by Department of General Services and the Attorney General of the State of California.

SAMPLE

58. STATE'S DISTRICT SUPERINTENDENT

For the purposes of this contract, the "District Superintendent" is the State representative responsible for the Premises. The District Superintendent is charged with the day-to-day administration of this contract and is the Concessionaire's initial contact with the State for information, contract performance, and other issues as might arise. The District Superintendent may delegate these responsibilities to a Sector or Park Superintendent or other individual.

SAMPLE

IN WITNESS WHEREOF, the parties hereto warrant that they respectively have the requisite authority to enter this contract, binding the named parties for which they sign, and have executed this concession contract at the respective times set forth below.

CONCESSIONAIRE:

Signed: _____

Name:_____

Title: _____

Date:_____

STATE OF CALIFORNIA
DEPARTMENT OF PARKS & RECREATION
DIRECTOR

Signed:_____

Name:___**Ruth Coleman**_____

Title: _____

Date:_____

APPROVED:

ATTORNEY GENERAL:

Approved as to legal sufficiency in accordance with the requirements of Sections 5080.02-5080.21 of the Public Resources Code.

EDMUND G. BROWN JR., Attorney General
of the State of California

By: _____
Deputy Attorney General

Dated:_____

APPROVED:

DEPARTMENT OF GENERAL SERVICES:

SAMPLE

EXHIBIT A – THE PREMISES

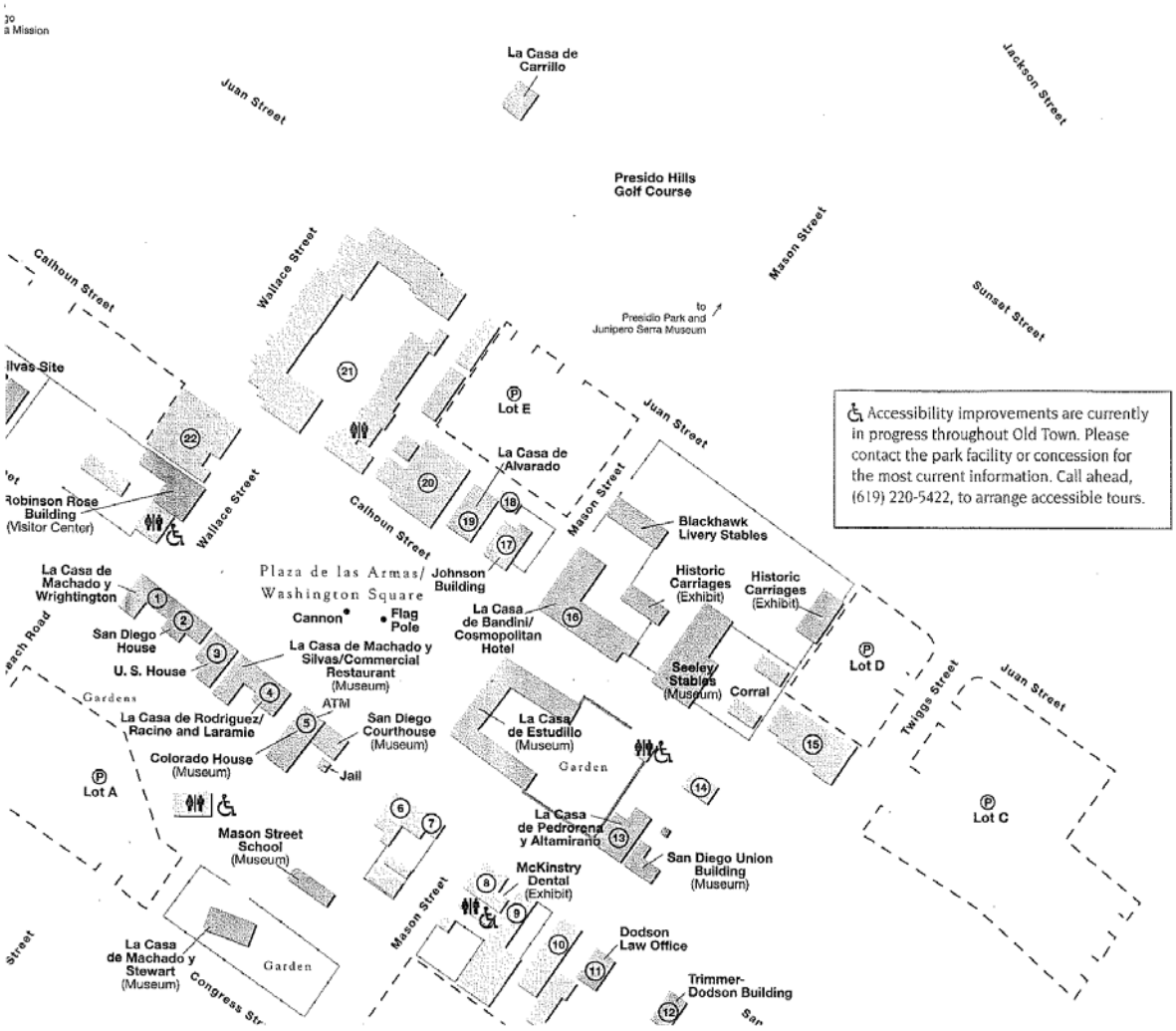

#1 – Casa de Wrightington

#8 – Sessions Building

EXHIBIT A

EXHIBIT B - CONSUMER PRICE INDEX ADJUSTMENT FORMULA

Consumer Price Index (CPI) adjustments shall be based on changes in the United States Department of Labor, Bureau of Labor Statistics Consumer Price Index for “All Urban Consumers, Los Angeles All Items, (1982-84=100)." Calculations shall employ the following formula:

"Base Index" =	CPI Index published for the month preceding the commencement date of this contract.
“Base Rent” =	Minimum rent during the first contract year.
"Year End Index" =	CPI Index for the month preceding the start of the subject contract year.

Step #1:	$\frac{\text{"Year End Index" - "Base Index"}}{\text{"Base Index"}}$	=	% Change
Step #2:	% Change x Base Rent	=	Adjustment
Step #3:	Base Rent + Adjustment	=	New Rent

SAMPLE

EXHIBIT C – DPR 54, CONCESSIONAIRE'S MONTHLY REPORT OF OPERATION

State of California - The Resources Agency
DEPARTMENT OF PARKS AND RECREATION

FOR DEPARTMENT COMPLETION	
DISTRICT NO.	PARK UNIT NO.
ROC DOCUMENT NO.	

CONCESSIONAIRE'S MONTHLY REPORT OF OPERATION

FOR THE MONTH OF _____ , YEAR _____

(Instructions on reverse.)

NAME OF CONCESSION	
ADDRESS	CITY/STATE/ZIP CODE
DISTRICT	PARK UNIT

TYPE OF RECEIPT	GROSS RECEIPTS	NUMBER OF UNITS *(WHERE APPLICABLE)*	CUMULATIVE GROSS TO DATE *(CONTRACT YEAR)*	PERCENT RATE OR AMOUNT PER UNIT DUE STATE	AMOUNT DUE TO STATE
FOOD & NONALCOHOLIC BEVERAGES					
ALCOHOLIC BEVERAGES					
MERCHANDISE					
EQUIPMENT RENTALS					
PAY SHOWERS					
VENDING MACHINES *(SEE REVERSE)*					
SUBTOTALS					
				ADJUSTMENTS *(EXPLAIN REASON ON REVERSE)*	
				TOTAL DUE *(EXPLAIN REASON ON REVERSE)*	

MAINTENANCE FEES
(COMPLETE THIS SECTION IF APPLICABLE)

THIS MONTH'S MAINTENANCE FEE ALLOCATION	CUMULATIVE MAINTENANCE FEE ALLOCATION YEAR TO DATE
_____ % x Monthly Gross Revenue = $	_____ % x Cumulative Gross Revenue = $
AMOUNT SPENT ON ELIGIBLE MAINTENANCE THIS MONTH	CUMULATIVE AMOUNT EXPENDED ON ELIGIBLE MAINTENANCE YEAR TO DATE
$	$

SEASONAL CONCESSIONS *(COMPLETE THIS SECTION IF APPLICABLE)*	EXACT DATE YOU CEASED OPERATIONS	DATE YOU EXPECT TO RESUME OPERATIONS

DECLARATION

I declare under penalty of perjury that the information on this form is accurate and complete to the best of my knowledge.

CONCESSIONAIRE'S SIGNATURE	PRINTED NAME	DATE
TITLE/POSITION		PHONE NO.

DPR 54 (Rev. 7/97)(Front)(Excel 11/17/2006) *Original - District; Copy - Northern Service Center*

DPR 54 COMPLETION INSTRUCTIONS

1. Provide the month and year of operation for which this report is being prepared.
2. Provide full name of the concession and the name and address of the concessionaire, including city, state and zip code.
3. Include all revenue for the month for each appropriate category. For "Vending Machine" revenue, please include the following sources:
   - Ice machines
   - Newspaper vending machines
   - Map and brochure vending machines
   - Grab boxes
   - Firewood dispensers
   - Air compressors
   - Washing machines and dryers

   Do not include the following sources as "Vending Machine" revenue:
   - Park UR Self machines
   - Pay showers
   - Iron rangers
4. Types of revenue that might be recorded on a "per unit" basis include:
   - Petroleum products (per gallon)
   - Group tours (per adult or children's ticket)
5. Complete the "Maintenance Fees" and "Seasonal Concessions" sections of the form if your concession contract requires a maintenance fee allocation and/or if your concession operates on a seasonal basis.
6. Sign and date the form and provide the preparer's title and telephone number.

COMMENTS/EXPLANATIONS:

DPR 54 (Back)

EXHIBIT D – OPERATION PLAN

This section will incorporate the successful concessionaire's plans

.

EXHIBIT E – FACILITY PLAN FOR CASA DE WRIGHTINGTON

At a minimum, the concessionaire's facility Plan shall consist of the following:

- Treat building for termites and repair any damage. This may including tenting of the building which would include adjacent San Diego House,
- Re-level interior and exterior tile/brick flooring the ADA specifications of no more than ¼" of space between the tile/bricks in areas as necessary,
- Replace all recessed and track lighting fixtures and replace with tin chandelier style ceiling light fixtures (see page 182 of the Old San Diego Retailer's Reference Guide), and wall sconce fixtures,
- Build and install a period appropriate front counter as specified in the Old San Diego Retailer's Reference Guide; which as part of this facility improvement shall become the property of the State upon the termination of the contract. It is the State's expectation that any counters, casework, furnishings, etc., will be antiques or constructed per the Retailer's Reference Guide to ensure the integrity of the historical time period.
- Keep area around fire place clear so visitors understand this was an actual home.
- Eliminate painted flowers on the front window panes.
- Replace all leaking water lines to irrigation system and all master irrigation control valves. Test drip irrigation system for proper operation and repair as needed,
- Trim and cut back yucca plants on north side of building by approximately 60%,
- Remove the three low-wattage halogen light fixtures on the front façade (underneath the eaves) of this building. The two fixtures installed on the wing, underneath the eaves may remain,
- Design and build an accessible 48 inch wide walking path constructed from compacted decomposed granite from the existing walking path in the rear of the building along the north side to the front of the building which will allow ADA access to the upper level of the building from the rear of the space. Archeological investigations/monitoring, design and construction plans, including materials used, are subject to State approval prior to work being done. The path shall meet the requirements for "Exterior Route of Travel" (ERT) as described in Section 32 which is attached and marked as **Attachment 2 – RFP**.
- Camouflage air-conditioning equipment at the rear of this building with lattice or crate style wood box allowing for unit to breath, design and construction, including materials used, are subject to State approval prior to work being done.
- As part of this improvement, design a sign at the top of the stairs communicating the alternative access to the merchandise on the bottom floor.

Important Note:
All facility improvements are to be pre-approved by the State in conformance with paragraph 9 of this contract.

EXHIBIT E – FACILITY PLAN FOR SESSIONS BUILDING

At a minimum, the concessionaire's facility Element shall consist of the following:

- Improve air flow of existing HVAC unit by enlarging opening of return air vent/grate and increasing the number of supply vents,
- Remove and eliminate electrical ceiling fans,
- Remove and replace interior ceiling light fixtures with approved, period fixtures,
- Remove and replace the non-period interior sconce light fixtures,
- Tent building for termites extermination, repair any damaged members,
- Re-stain interior open-beam ceiling to match existing color in retail area,
- Replace interior wood flooring in 1st floor retail space,
- Build and install a period appropriate front counter as specified in the Old San Diego Retailer's Reference Guide; which as part of this facility improvement shall become the property of the State upon the termination of the contract. It is the State's expectation that any counters, casework, furnishings, etc., will be antiques or constructed per the Retailer's Reference Guide to ensure the integrity of the historical time period.
- Build and install at least two large display counters with corresponding case work as specified in the Old San Diego Retailer's Reference Guide; which as part of this facility improvement shall become the property of the State upon the termination of the contract.
- Craft and install period wooden hand rail on interior stairway to second floor,
- Restore historic concrete and flagstone stoop at rear entrance of building,
- Replace water heater,
- Secure upstairs restroom to ensure non-operational, preserving integrity of the building,
- Repair exterior stucco siding as needed and paint to match existing,
- Inspect roof for leaks, dry rot and termite damage. Repair as needed including any sub roofing material and replace and properly secure any roof tiles,
- Replace rotten wood hardscape in front of main entrance of building with either stabilized decomposed granite or inlay brick,
- Replace the exterior lighting fixtures with approved period fixtures,
- Remove lettering on windows, as it is not period correct, do not cover the windows with the backs of display cases or anything else.

Important Note:
All facility improvements are to be pre-approved by the State in conformance with paragraph 9 of this contract.

EXHIBIT F - INTERPRETIVE PLAN

This section will incorporate the successful concessionaire's plans.

SAMPLE

EXHIBIT G – DPR 86 CONCESSIONAIRE FINANCIAL STATEMENT

State of California - The Resources Agency
DEPARTMENT OF PARKS AND RECREATION

CONCESSIONAIRE FINANCIAL STATEMENT

CONCESSIONAIRE NAME	CONCESSION NAME
PARK UNIT NAME	REPORTING PERIOD From: _____ To: _____

A. CASH FLOW STATEMENT

GROSS SALES/RECEIPTS		$ _____
Less Returned Sales and Allowances	$ _____	
Less Sales Taxes	_____	
Net Sales for Period		$ _____
Cost of Goods Sold:		
Inventory at Beginning of Period	$ _____	
Add Purchases During Period	_____	
Merchandise Available for Sale	_____	
Less Inventory at Close of Period	_____	
Less Cost of Goods Sold		$ _____
	GROSS PROFIT	$ _____
LESS EXPENSES		
Salaries & Wages *(do not include Concessionaire salaries)*	$ _____	
Rent to State	_____	
Insurance	_____	
Materials & Supplies	_____	
Maintenance & Repairs	_____	
Utilities *(including telephone)*	_____	
Advertising	_____	
Taxes & Licenses *(other than income & sales)*	_____	
Legal & Accounting	_____	
Travel & Transportation	_____	
Interest	_____	
Security	_____	
Administrative Overhead	_____	
Depreciation *(equipment)*	_____	
Amortization *(improvements)*	_____	
Other: _____	_____	
Other: _____	_____	
Other: _____	_____	
Other: _____	_____	
	TOTAL EXPENSES	$ _____
	NET PROFIT FROM OPERATIONS *(before income taxes)*	$ _____

SAMPLE

CONCESSIONAIRE FINANCIAL STATEMENT

CONCESSIONAIRE NAME	CONCESSION NAME
PARK UNIT NAME	REPORTING PERIOD From: _____ To: _____

B. SCHEDULE OF DEPRECIATION

Columns 5, 8, and 9 must add to the total shown in Column 4. If you need more space to list all equipment, use additional pages and number B-2, B-3, etc. Use reverse side for remarks.

DESCRIPTION OF EQUIPMENT (1)	DATE ACQUIRED (2)	CONDITION *(X)* (3)		ACQUISITION COST (4)	PRIOR YEARS' DEPRECIATION (5)	RATE *(%)* (6)	LIFE YEARS (7)	DEPRECIATION THIS PERIOD (8)	BALANCE TO BE DEPRECIATED (9)
		New	Used						

CONCESSIONAIRE FINANCIAL STATEMENT

CONCESSIONAIRE NAME	CONCESSION NAME
PARK UNIT NAME	REPORTING PERIOD From: _____ To: _____

C. BALANCE SHEET

ASSETS

CURRENT ASSETS

Cash	$ _____	
Accounts Receivable	_____	
Merchandise Inventory	_____	
Notes Receivable (Less than 1 year)	_____	
TOTAL CURRENT ASSETS		**$** _____

NONCURRENT ASSETS

Equipment/Property	$ _____	
Less Depreciation Reserve	_____	
Net Equipment/Property Cost	_____	
Prepaid Expenses	_____	
Other: _____	_____	
Other: _____	_____	
TOTAL NONCURRENT ASSETS		**$** _____
TOTAL ASSETS		**$** _____

LIABILITIES

CURRENT LIABILITIES

Accounts Payable	$ _____	
S & W Payable	_____	
Short-Term Notes Payable	_____	
Interest Payable	_____	
Short-Term Loan Payable	_____	
Other: _____	_____	
Other: _____	_____	
TOTAL CURRENT LIABILITIES		**$** _____

OTHER LIABILITIES

Other: _____	$ _____	
Other: _____	_____	
TOTAL OTHER LIABILITIES		**$** _____
TOTAL LIABILITIES		**$** _____

CAPTIAL

OWNER'S EQUITY

Capital	$ _____	
Less Personal Drawing	$ _____	
Net Addition	$ _____	
Stockholder's Equity	$ _____	
Other: _____	$ _____	
TOTAL CAPITAL		**$** _____
TOTAL LIABILITIES AND CAPITAL		**$** _____

SAMPLE

CONCESSIONAIRE FINANCIAL STATEMENT

CONCESSIONAIRE NAME	CONCESSION NAME
PARK UNIT NAME	REPORTING PERIOD From: _____ To: _____

D. STATEMENT OF MONTHLY GROSS SALES/RECEIPTS

Jan 20 ___ $ _____	April 20 ___ $ _____	July 20 ___ $ _____	Oct 20 ___ $ _____
Feb 20 ___ $ _____	May 20 ___ $ _____	Aug 20 ___ $ _____	Nov 20 ___ $ _____
Mar 20 ___ $ _____	June 20 ___ $ _____	Sept 20 ___ $ _____	Dec 20 ___ $ _____

TOTAL MONTHLY GROSS SALES/RECEIPTS $ _____

If the "Total Monthly Gross Sales/Receipts" above does not match the Cash Flow Statement "Gross Sales/Receipts," please explain below.

The undersigned declares and certifies that the above statement and the attached Cash Flow Statement, Schedule of Depreciation, and Balance Sheet are correct.

AUTHORIZED SIGNATURE DATE

▶

PRINTED NAME OF PREPARER

SAMPLE

EXHIBIT H – DPR 531, CONCESSION PERFORMANCE RATING

State of California - The Resources Agency
CALIFORNIA STATE PARKS

CONCESSION PERFORMANCE EVALUATION

INSTRUCTIONS

The Concession Performance Evaluation form, DPR 531, is used to conduct concession performance evaluations. For assistance with completing this form, refer to the Concession Performance Evaluation Standards and Guidelines. In completing the DPR 531, note the following:

- Not all categories may apply.
- The OTHER category may be used for items required by contract but not already listed, such as Business Plan or Facility Development Plan.
- Some categories have higher point values.
- Some categories are scored only as COMPLIANCE/NONCOMPLIANCE.
- The rater must comment on any rating in which the concessionaire received a score other than SATISFACTORY OR COMPLIANCE.

To complete the form:

1. Add the points circled in each column and enter the total per column for each page.
2. Add the totals per column for page 1 and page 2, and enter where indicated.
3. Add the column totals for all categories together. Divide the sum by the maximum total points possible, then multiply by 100 to obtain the PERCENT RATING. (To obtain the maximum points possible, add the excellent and compliance points of the rated categories.)
4. Check whether the concessionaire received a rating of NONCOMPLIANCE/UNACCEPTABLE for any category rating. If so, the OVERALL RATING must be either NEEDS IMPROVEMENT or UNACCEPTABLE regardless of the PERCENT RATING.
5. If Item 4 above applies, proceed to Item 6. If not, check the appropriate OVERALL RATING based on the PERCENT RATING.
6. The employee conducting the evaluation signs the form as the rater, checks whether he/she has discussed the report with the concessionaire, and submits the report to the concessionaire.
7. The concessionaire reviews and signs the evaluation within 14 days of receipt, and submits the form to the District office for processing.

SAMPLE

CONCESSION PERFORMANCE RATING

State of California - The Resources Agency
CALIFORNIA STATE PARKS

DISTRICT	PARK UNIT	DATE
CONCESSIONAIRE	TYPE OF CONCESSION	

	CATEGORIES *Circle the appropriate points in each category. If category is not applicable, check not applicable (NA) box.*	EXCELLENT (E)	SATISFACTORY (S)	NEEDS IMPROVEMENT (NI)	NONCOMPLIANCE/ UNACCEPTABLE (NON)	COMPLIANCE (COM)	NOT APPLICABLE (NA)	COMMENTS *Explain items which are rated excellent, needs improvement or noncompliance/unacceptable. Make recommendations for correction for NI and NON rating. Attach additional sheets as necessary.*
ACCOUNTING	RENTAL PAYMENT	8	6	2	0			
	MONTHLY DPR 54 SUBMITTAL	4	3	1	0			
	ANNUAL DPR 86 SUBMITTAL	4	3	1	0			
	MAINTAINS REGISTER JOURNAL/$ TRAIL				0	4		
	OTHER:				0	4		
BONDS/INSURANCE	PERFORMANCE BOND				0	4		
	LIABILITY INSURANCE				0	4		
	FIRE INSURANCE				0	4		
	AUTOMOBILE INSURANCE				0	4		
	OTHER:				0	4		
CONSTRUCTION	REQUIRED IMPROVEMENTS				0	4		
	TIME SCHEDULE				0	4		
	PAYMENT BOND				0	4		
	OTHER:				0	4		
USE OF PREMISES	OPERATING DAYS/HOURS	4	3	1	0			
	AUTHORIZED GOODS/SERVICES	4	3	1	0			
	APPROPRIATE SIGNAGE/ADVERTISING	4	3	1	0			
	OTHER:	4	3	1	0			
QUALITY ASSURANCE	GOODS	8	6	2	0			
	SERVICES	8	6	2	0			
	PRICES (COMPETITIVE/POSTED)	4	3	1	0			
	CUSTOMER SERVICE	8	6	2	0			
	OTHER:	4	3	1	0			
	TOTAL POINTS PER COLUMN *PAGE 1 ONLY*				0			

SAMPLE

	CATEGORIES	E	S	NI	NON	COM	NA	COMMENTS
SAFETY	FIRE SAFETY/PREVENTION	4	3	1	0			
	GAS/ELECTRIC	4	3	1	0			
	GENERAL SAFETY	4	3	1	0			
	OTHER:	4	3	1	0			
FACILITY MAINTENANCE	INTERIOR - HOUSEKEEPING/CLEANLINESS	4	3	1	0			
	INTERIOR - FACILITY MAINTENANCE	4	3	1	0			
	EXTERIOR - HOUSEKEEPING/CLEANLINESS	4	3	1	0			
	EXTERIOR - FACILITY MAINTENANCE	4	3	1	0			
	GROUNDS - HOUSEKEEPING/CLEANLINESS	4	3	1	0			
	GROUNDS - FACILITY MAINTENANCE	4	3	1	0			
	MAINTENANCE PLAN	4	3	1	0			
	OTHER:	4	3	1	0			
INTERPRETIVE PROGRAM *(When Applicable)*	COSTUMES	4	3	1	0			
	MERCHANDISE AND INTERPRETIVE PLAN	4	3	1	0			
	FURNISHINGS AND INTERPRETIVE PLAN	4	3	1	0			
	EVENTS/ACTIVITIES AND INTERPRETIVE PLAN	4	3	1	0			
	IMPLEMENTATION OF INTERPRETIVE PLAN	4	3	1	0			
	OTHER:	4	3	1	0			
	TOTAL POINTS PER COLUMN ***PAGE 2 ONLY***				0	0		
	TOTAL POINTS PER COLUMN ***PAGE 1 + PAGE 2***				0			

(TOTAL POINTS RECEIVED FROM ALL CATEGORIES _____ ÷ MAXIMUM POINTS POSSIBLE FOR RATED CATEGORIES _____) x 100 = **PERCENT RATING** #DIV/0!

ARE THERE ANY NONCOMPLIANCE OR UNACCEPTABLE RATINGS IN ANY CATEGORY?* ☐ Yes ☐ No

OVERALL RATING *(Based on percent rating)*

☐ **EXCELLENT***(90% to 100%)* ☐ **SATISFACTORY***(70% to 89%)* ☐ **NEEDS IMPROVEMENT***(60% to 69%)* ☐ **UNACCEPTABLE** *(less than 60%)*

RATER'S SIGNATURE | TITLE | DATE

RATER DISCUSSED REPORT WITH CONCESSIONAIRE? ☐ Yes. Date:_____ ☐ No

In signing this report I do not necessarily agree with the conclusion of the rater.

CONCESSIONAIRE'S SIGNATURE | TITLE | DATE

***NOTE:** A rating of* UNACCEPTABLE *or* NONCOMPLIANCE *in any category will result in an overall rating of no higher than* NEEDS IMPROVEMENT.

SAMPLE

EXHIBIT I – CONCESSION MAINTENANCE PROGRAM

MAINTENANCE SCHEDULE

The minimum guidelines for maintenance of this facility are as follows:

Monthly:

1. Service HVAC unit; change filters and clean condenser fins every 90 days.
2. Maintain housekeeping duties to interior and exterior of building including exterior landscaping.
3. Twice annually, wash and wax interior wood floors. Wash with mineral spirits (paint thinner). Wax with a floor wax. After wax dries, buff to a soft shine.

Annually:

1. Have a certified building inspector conduct an annual maintenance inspection of the facility and provide a written report to the District Superintendent thirty (30) days prior to the end of each contract year.

2-Year Interval:

1. Paint interior of building and exterior trim.
2. Termite inspection and extermination as needed and any repairs resulting from termite damage.
3. Inspect all windows and doors for proper operation and broken glass, repair as needed.
4. Resurface interior wooden flooring in retail area.
5. Repair all counter tops and display cases.
6. Inspect all plumbing fixtures for damage or leakage and repair as needed.
7. HVAC unit to be tested for proper operation and refrigerant charge and repair as needed.

5-Year Interval:

1. Repaint exterior of building and all signage.
2. Complete roof inspection and repair any damage as needed.
3. Replace water heater.

Important Note:

All maintenance projects listed above as bi-annual through 5 year interval are to be pre-approved by the State. Any additional maintenance projects the concessionaire wants to accomplish through the contract term shall also be pre-approved by the State. There may be additional Project Evaluation Form ("PEF") submittals that may be required so concessionaire must allow adequate time for project review. Initially, however, the concessionaire shall:

1. Submit a written proposal package (Concession Maintenance Project Proposal Form) to the District Superintendent for prior written approval. The Project Proposal Package is to include, but is not limited to the following:

   a. Provide a background narrative & justification statement (for work other than the above listed "Maintenance Schedule").

   b. Provide a full Written Description of Project:
      -What work is to be accomplished,
      -Cost estimates with basis,

SAMPLE

-Design/Construction drawings, photos, maps, etc. (if appropriate),
-Material and equipment submittals,
-How the work is to be accomplished,
-Who is doing the work (include license number if applicable),
-Proposed start date and estimated completion date,
-Hours of planned work activity,
-Description of proposed safety measures to be taken,
-Listing of Project Supervisor and On-Site Supervisor,
-List anticipated archeological impacts,
-List archeological consultant to be used (if applicable).

c. Compliance with Federal and State Accessibility Standards.

d. Analysis of foreseen impacts to the visiting public and to natural and cultural resources.

2. All work which modifies the existing configuration of facilities and/or site improvements shall be defined by construction documents and shall comply with paragraph **9. Construction and Completion of Improvements.**

3. All approved projects shall be performed by licensed California contractors, except with the prior written authorization of the District Superintendent, with work meeting or exceeding all applicable codes and regulations. All work on electrical systems, fire protection systems, or gas-fired heating systems shall be performed by a California licensed contractor.

4. Projects and work sites are subject to on-site inspection and review by the State.

SAMPLE

EXHIBIT J – DRUG FREE WORKPLACE CERTIFICATION STD 21

STATE OF CALIFORNIA

DRUG-FREE WORKPLACE CERTIFICATION

STD. 21 (Rev. 12/93)(CA ST PKS, EXCEL 4/9/1999)

CERTIFICATION

I, the official named below, hereby swear that I am duly authorized to legally to bind the contractor or grant recipient to the certification described below. I am fully aware that this certification, executed on the date below, is made under penalty of perjury under the laws of the State of California.

CONTRACTOR/BIDDER FIRM NAME		FEDERAL ID NUMBER
BY (*Authorized Signature*)	BY (*Authorized Signature*)	DATE EXECUTED
	PRINTED NAME PERSON SIGNING	TELEPHONE NUMBER (*Include Area Code*)
TITLE	TITLE	
CONTRACTOR/BIDDER FIRM'S MAILING ADDRESS	Same	

The contractor or grant recipient named above hereby certifies compliance with Government Code Section 8355 in matters relating to providing a drug-free workplace. The above named contractor or grant recipient will:

1. Publish a statement notifying employees that unlawful manufacture, distribution, dispensation, possession, or use of a controlled substance is prohibited and specifying actions to be taken against employees for violations, as required by Government Code Section 8355(a).

2. Establish a Drug-Free Awareness Program as required by Government Code Section 8355(b), to inform employees about all of the following:

   (a) The dangers of drug abuse in the workplace,

   (b) The person's or organization's policy in maintaining a drug-free workplace,

   (c) Any available counseling, rehabilitation and employee assistance programs, and

   (d) Penalties that may be imposed upon employees for drug abuse violations.

3. Provide as required by Government Code Section 8355(c), that everyone who works on the proposed contract or grant:

   (a) Will receive a copy of the company's drug-free workplace policy statement, and

   (b) Will agree to abide by the terms of the company's statement as a condition of employment on the contract or grant.

4. At the election of the contractor or grantee, from and after the "Date Executed" and until _____ (DATE) (NOT TO EXCEED 36 MONTHS), the state will regard this certificate as valid for all contracts or grants entered into between the contractor or grantee and this state agency without requiring the contractor or grantee to provide a new and individual certificate for each contract or grant. If the contractor or grantee elects to fill in the blank date, then the terms and conditions of this certificate shall have the same force, meaning, effect and enforceability as if a certificate were separately, specifically, and individually provided for each contract or grant between the contractor or grantee and this state agency.

SAMPLE