PROJECT NAME	DATE	PAGE #
TRAIL BRIDGE	2/17/2016	1
SECTION	ENG/CKR	
FRP LOW PROFILE	JWW	

DESIGN CRITERIA

Material: (unless noted otherwise)

Concrete: f'c = 2,500 psi @ 28 days

Masonry: ASTM C90, f'm = 1,500 psi @ 28 days, 1/2 stress design. No special inspection.

Reinf. Steel: ASTM A615, grade 60 UNO, grade 40 #4 and smaller.

Lumber: W.C.D.F. Grades as follows:

Joist, Plates & Studs	No. 2
Beams & Headers	No. 1
Plywood	PS 1-95
Glued-Laminated Beams (GLB)	24F V4 (DF/DF) simple span
	24F V8 (DF/DF) cant. or cont. beam & column
Exterior Glue-Laminated Beam (GLB-EXT)	20F V12 (AC/AC) tension lams top & bottom

Structural Steel:

WF Shapes & Plates	ASTM A-572 Gr 50
C and L Shapes	ASTM A-36
Pipes	ASTM A-53 Grade B fy = 35 ksi (36 ksi effctive)
Round HSS	ASTM A-500 Grade B fy = 42 ksi
Square & Rectangular HSS	ASTM A-500 Grade B fy = 46 ksi

Design Codes:

2013 California Building Code
ASCE 7-10 Minimum Design Loads for Buildings and Other Structures
ACI 318-11 Building Code Req. for Structural Concrete
TMS 402-11/ACI 530-11/asce 5-11 Building Code Req. for Masonry Sturctures
AISC 360-10 Specification for Structural Steel Buildings
ASIC 341-10 Seismic Provisions for Structural Steel Buildings
AF&PA NDS-12 National Design Specification for Wood Construction
AF&PA SDPWS-08 Special Design Provisions for Wind & Seismic
The Aluminum Assocaition Specifications & Guidelines for Aluminum Structures

Building Type: Risk Category II

Wind Criteria:

Basic Wind Speed -	110
Wind Exposure -	C

Seismic Criteria:

Site Class	D	S_s =	2.522	S_{DS} =	1.681
Ie =	1	S_1 =	1.212	S_{D1} =	1.212
Seismic Design Category	E				
R =	1.25	Ω =	2	C_d =	

Foundation Criteria: Per Soils Report N/A dated

Allowable Bearing Pressure, DL + LL = N/A

REGISTERED PROFESSIONAL ENGINEER
JESSICA WOY WALLER
C 71478
EXP 12/17
CIVIL
STATE OF CALIFORNIA

PROJECT NAME	DATE	PAGE #
TRAIL BRIDGE	2/17/2016	2
SECTION	ENG/CKR	
FRP	JWW	

STRUCTURAL CALCULATIONS FOR 20' X5' FRP TRIAL BRIDGE

NOTES:

1 Design Engineer is not responsible for abutmnet design or for wood components. Those design and calculations aer by others.

2 These calcualtions are for new FRP memebers.

3 Material & Specifications:

FRP memebrs - Extern 500 Serices by Strongwell

4 Factor of Safety (manufacturer recommended)

Bending - 2.5

Shear - 3.0

Connections - 4.0

STRUCTURAL CALCULATIONS
CBC 2013, ASCE 7-10

PROJECT NAME : Trail Bridge Design - 20' SPAN FRP LOW PROFILE
DESIGNER : J. Waller
CHECKED BY :
DATE : FEB-17-2016
PAGE : 3

LOAD SUMMARY

SPAN, L =	20
UNBRACED LENGTH =	5
WIDTH, W =	5
Number of Beams =	3

A. MATERIALS:

STRUCTURE:	FIBERGLASS FRAME		I-BEAM	12 x 6 x 1/2				
F_y =	-	(KSI)	WEIGHT, wt. =	9.24	(PLF)	I_X =	254.1	(IN^4)
F_U =	-	(KSI)	DEPTH, d =	12	(IN)	S_X =	42.3	(IN^3)
E =	2,500	(KSI)	AREA, A =	11.51	(IN^2)	S_Y =	6.05	(IN^3)

DECKING: DOUGLAS FIR (PTDF)
RAILING: REDWOOD OR CEDAR
FASTNERS: 316 STAINLESS STEEL

B. DEAD LOAD:

	size	length (ft)	total volume (cf)	density (pcf)*	quantity	(LBS)
DECKING	4x12	6	35	33	1	1,155
POST	4x6	6	0.80	28	10	225
RAILING	4x6	20	2.67	28	2	150
DIAGONALS	4x6	6.1	0.82	28	10	228
CHANNELS	C 8x2-3/16x1/4	5	-	2.32	5	58
ANGLES	L 6x6x1/2	0.92	-	4.64	24	102
MISC.	-	-	-	-	-	192
					TOTAL	2,110

* assumed worsed case material weight

DEAD LOAD, DL =	2,200	(LBS)	[<<< say]
LOAD, w_{DL} =	18	(PSF)	
TOTAL WEIGHT, W =	2,754	(LBS)	

C. LIVE LOAD:

LIVE LOAD, LL = 100 (PSF)

D. LATERAL LOAD:

WIND

WIND PRESSURE, p_s =	35.2	(PSF)	
PROJECTED AREA, A_F =	59	(SF)**	**Assume wind is prjected on both railings at the same time
UNFACTORED WIND LOAD, F_w =	2,082	(LB)	[<<<< WIND GOVERNS]

Applied load (in RISA):

DISTRIBUTED WIND LOAD, w_w =	56	(PLF)	[WIND FORCE ON GIRDERS]
POINT LOAD, P_w =	230	(LBS)	[WIND FORCE ON RAILING, APPLIED @ 6 JOINTS]

SEISMIC

SEISMIC LOAD, F_S = 935 (LBS)

STRUCTURAL CALCULATIONS
CBC 2013, ASCE 7-10

PROJECT NAME : **Trail Bridge Design - 20' SPAN FRP LOW PROFILE**
DESIGNER : J. Waller
CHECKED BY :
DATE : FEB-17-2016
PAGE : 4

DESIGN WIND LOADS

A. DESIGN PARAMETERS:

STRUCTURE TYPE : LATTICE FRAMEWORK — HEIGHT ABOVE GROUND LEVEL, z = 30 (FT)

TYPLICAL MEMBER CROSS-SECTION : SQUARE (WIND NORMAL TO FACE)

FRP - STRONGWELL EXTERN 500

SPAN, B =	20.00	(FT)
WIDTH, W =	5.00	(FT)
GIRDER DEPTH, d =	12.00	(IN)
HEIGHT, h =	5.08	(FT)

GROSS AREA NORMAL TO WIND, Ag = 102 (SF)

PROJECTED AREA:

	thickness (in)	length (in)	quanity	total (in^2)
Railing	5.5	240	1	1320
Posts	5.5	42	3	693
Diagonals	5.5	73.5	2	808.5
Decking	3.5	240	1	840
girder	12.00	240	1	2880

TOTAL OPEN AREA, A_o = 56 (SF)
AREA PROJECTED NORMAL TO WIND, A_f = 45 (SF)
RATIO OF SOILD AREA TO GROSS AREA, ε = 0.45

B. RICK CATEGORY OF STRUCTURE (PER CBC TABLE 1604.5): RISK CATEGORY - TYPE II

C. BASIC WIND SPEED, V_{ult} (PER ASCE 7, FIG. 26.5-1A, 1B, 1C) V_{ult} = 110 MPH [CALIFORNIA ONLY]

D. WIND DIRECTIONALITY FACTOR, K_d (PER ASCE 7, TABLE 26.6-1) K_d = 0.85

E. IMPORTANCE FACTOR, Iw (PER ASCE 7, TABLE 1.5.1) I = 1.0

F. EXPOSURE CATEGORY (PER CBC 2013, SECT. 1609.4.3): C OPEN TERRAIN WITH SCATTERED OBSTRUCTIONS

G. TOPOGRAPHIC FACTOR, K_{zt} (PER ASCE 7, SECT. 26.8.2) K_{zt} = 1.0

[NOTE: 1.0 WILL BE USED UNLESS THE STRUCTURE IS NEAR A KNOWN RIDGE OR ESCARPMENT. THEN ADDITIONAL CALCULATIONS WILL BE PROVIDED DETERMINING THE EXACT K_{zt} FACTOR]

H. GUST EFFECT FACTOR, G (PER ASCE 7, SECT. 26.9) G = 0.85

I. VELOCITY PRESSURE EXPOSURE COEFFICIENTS, K_h & K_z (PER ASCE 7, TABLE 29.3-1): $K_h = K_z$ = 0.98

J. VELOCITY PRESSUR, q_z OR q_h (PER ASCE EQ. 29.3-1): $q_z = q_h = 0.00256\ K_z\ K_{zt}\ K_d\ V^2$ = 25.9 (PSF)

K. FORCE COEFFICIENT, Cf (PER ASCE 7, FIG. 29.5-2) Cf = 1.60

L. WIND PRESSURE, p_s $p_s = q_z\ G\ C_f$ = **35.2** **(PSF)**

M. DESIGN WIND FORCE, F (PER ASCE 7, EQ. 29.5-1) F = qz G Cf Af = 1,598 (LBS) [USE DESIGN LOAD]

MINIMUM LOAD (PER ASCE 7, SECT. 29.8) $F = 16\ A_f$ = 727 (LBS)

SEISMIC LOADING

A. SEISMIC IMPORTANCE FACTOR, I_e (PER ASCE 7, TABLE 1.5-2)

I_e = 1 RISK CATEGORY - TYPE II (PER CBC 2013, TABLE 1604.5)

B. SITE CLASS (PER ASCE 7, TABLE 20.3-1 OR SOILS REPORT)

SITE CLASS DESIGNATION = D. STIFF SOIL (DEFAULT)
FRP - STRONGWELL EXTERN 500

C. MAPPED SPECTRAL ACCELERATIONS, MCE (PER ASCE 7, FIGS. 22-1 TO 22-14 OR USGS SEISMIC VALUES)

http://earthquake.usgs.gov/designmaps/us/application.php

S_S = 2.522 (SEE ATTACHED PRINTOUT FROM USGS SEISMIC WEBSITE)
S_1 = 1.212 (SEE ATTACHED PRINTOUT FROM USGS SEISMIC WEBSITE)

D. SPECTRAL RESPONSE COEFFICIENTS

F_a = 1.00 (PER CBC 2013 TABLE 1613.3.3(1) OR ATTACHED USGS WEBSITE PRINTOUTS)
F_v = 1.50 (PER CBC 2013 TABLE 1613.3.3(2) OR ATTACHED USGS WEBSITE PRINTOUTS)

E. MAXIMUM COSIDERED EARTHQUAKE RESPONSE ACCELERATIONS

S_{MS} = $F_A * S_S$ = 2.522 (PER CBC 2013, EQ 16-37, OR ATTACHED USGS WEBSITE PRINTOUT)
S_{M1} = $F_V * S_1$ = 1.818 (PER CBC 2013, EQ 16-38, OR ATTACHED USGS WEBSITE PRINTOUT)

F. DESIGN SPECTRAL RESPONSE ACCELERATIONS

S_{DS} = $(2/3) * S_{MS}$ = 1.681 (PER CBC 2013, EQ. 16-39)
S_{D1} = $(2/3) * S_{M1}$ = 1.212 (PER CBC 2013, EQ. 16-40)

G. SEISMIC DESIGN CATEGORY (PER CBC 2013 TABLE 1613.3.5(1-2))

E (BASED ON S_{DS} VALUES & TYPE I, II, III,OR IV OCCUPANCY)
E (BASED ON S_{D1} VALUES & TYPE I, II, III,OR IV OCCUPANCY)

H. PERIOD

T_0 = $0.2 S_{D1} / S_{DS}$ = 0.14 SEC., (PER ASCE 7 SECTION 11.4.5)
T_S = S_{D1} / S_{DS} = 0.72 SEC., (PER ASCE 7 SECTION 11.4.5)
T_L = 12 SEC., (PER ASCE 7 FIG 22-12 TO 22-16)

I. STRUCTURE TYPE FIBERGLASS FRAME

E = 2,500,000 (PSI)
I = 762.3 IN^4
L = 20.00 FT
W = 2,754 LBS
$K = 3EI/L^3$ = 414
g = 32.2 FT/SEC^2
$T = 2\pi / (Kg/W)^{0.5}$ = 2.86 SEC.

J. REPONSE MODIFICATION COEFFICIENT, R

R = 1.25 (PER ASCE 7, TABLE 15.4-1 & 2) SELF-SUPPORTING STRUCTURE

K. OVERSTRENGHT FACTOR, Ω_0

Ω_0 = 2.00 (PER ASCE 7, TABLE 15.4-1 & 2)

L. SEISMIC RESPONSE COEFFICIENT, CS (PER ASCE 7, SECT. 12.8.1)

C_S = $S_{DS}/(R/I_e)$ = 1.35 (PER ASCE 7 EQ 12.8-2)

NOT TO EXCEED:

C_S = $S_{D1} / (T (R/I_e))$ = 0.34 FOR $T <= T_L$ (PER ASCE 7, EQ 12.8-3)
C_S = $S_{D1} T_L / (T^2 (R/I_e))$ = 1.42 FOR $T > T_L$ (PER ASCE 7, EQ 12.8-4)
C_{Smax} = 0.34

NOT LESS THAN:

C_S = $0.044 S_{DS} I_e$ = 0.074 (PER ASCE 7 EQ 15.4-1)
OR
C_S = $0.8 S_1/(R/I_e)$ = 0.78 (PER ASCE 7 EQ 15.4-2)
C_{Smin} = 0.78 [NOT LESS THAN]

C_S = 0.34

M. SEISMIC BASE SHEAR, V (PER ASCE 7, EQ. 12.8-1)

V = $C_S * W$ = 935 LBS

IF T < 0.06 SEC. (PER ASCE 7, EQ. 15.4-5)

V = $0.3 S_{DS} W I_e$ = 1,389 LBS

V = 935 LBS

BEAM DESIGN

$span := 20 \cdot ft$
$width := 5 \cdot ft$
$No.beams := 3$

FRP W-SHAPE MEMEBR - 12 X 6 X 1/2 X 1/2

$w_{beam} := 9.24 \cdot plf$ $\quad E := 2.5 \cdot 10^6 \cdot psi$
$d := 12 \cdot in$ $\quad G := .425 \cdot 10^6 \cdot psi$
$S_x := 42.3 \cdot in^3$
$I_x := 254.10 \cdot in^4$ $\quad C_1 := 1.13$
$I_y := 18.11 \cdot in^4$ $\quad K_y := 1$
$J := .958 \cdot in^4$
$A_w := 5.5 \cdot in^2$

unbraced lenght $\quad l_u := 5 \cdot ft = 60\ in$

Allowable Bending Stress:

$$N := \frac{\pi}{(K_y \cdot l_u)} \left(\sqrt{E \cdot I_y \cdot G \cdot J}\right) = 19\ ft \cdot kip$$

$$B := \pi^2 \cdot \frac{E \cdot I_y}{(K_y \cdot l_u)^2} = 124\ kip$$

$$F'_u := \frac{C_1}{S_x} \cdot \sqrt{N^2 + \frac{d^2 \cdot B^2}{4}} = 20782\ psi$$

$$F'_b := \frac{F'_u}{2.5} = 8313\ psi$$

Allowable Stear Stress:

$F_v := 1500 \cdot psi$ $\quad$ includes a factor of satety of 3.0

Created with PTC Mathcad Express. See www.mathcad.com for more information.

LOADING:

Dead Load

$$w_{DL} := 18 \cdot psf \cdot \frac{width}{No.beams} = 30\ plf$$

$$w_{total_DL} := w_{DL} + w_{beam} = 39.24\ plf$$

Live Load

$$w_{LL} := 100 \cdot psf \cdot \frac{width}{No.beams} = 167\ plf$$

$$W := w_{total_DL} + w_{LL} = 206\ plf$$

Calculate Max Moment:

$$M_{max} := \frac{W \cdot span^2}{8} = 10.3\ ft \cdot kip$$

$$f_b := \frac{M_{max}}{S_x} = 2921\ psi \qquad \text{if}\left(f_b < F'_b, \text{"OK"}, \text{"FAIL"}\right) = \text{"OK"}$$

$$\frac{f_b}{F'_b} = 0.351$$

Calculate Max Sheer:

$$V_{max} := \frac{W \cdot span}{2} = 2.1\ kip$$

$$f_v := \frac{V_{max}}{A_w} = 374.4\ psi \qquad \text{if}\left(f_v < F_v, \text{"OK"}, \text{"FAIL"}\right) = \text{"OK"}$$

$$\frac{f_v}{F_v} = 0.25$$

Calculate Defelection

$$K_b := 0.013$$

$$K_v := 0.35$$

$$\Delta := K_b \cdot \left(\frac{w_{LL} \cdot span^4}{E \cdot I_x}\right) + K_v \cdot \left(\frac{w_{LL} \cdot span^2}{A_w \cdot G}\right) = 1.063\ in$$

$$\Delta' := \frac{span}{240} = 1\ in \qquad \text{if}\left(\Delta < \Delta', \text{"OK"}, \text{"FAIL"}\right) = \text{"FAIL"}$$

note: fails only by 0.063", therefore "ok"

Created with PTC Mathcad Express. See www.mathcad.com for more information.

TABLE B-1

LATERAL BUCKLING COEFFICIENTS FOR BEAMS WITH VARIOUS LOAD AND SUPPORT ARRANGEMENTS

Loading and end restraint * about X-axis	Bending Moment diagram	End Restraint about Y-axis	K_y	C_1*
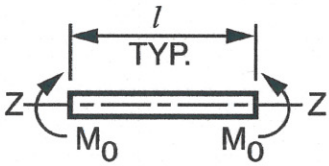	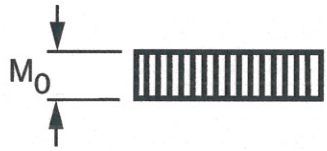	None	1.0	1.0
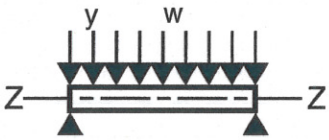	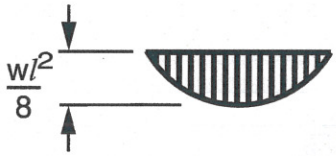	None Full	1.0 0.5	1.13 0.97
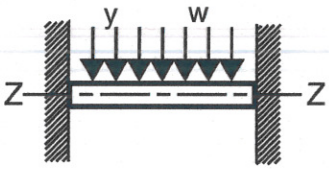	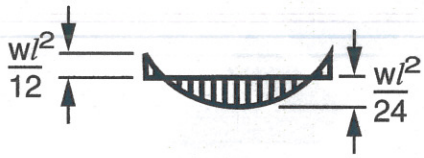	None Full	1.0 0.5	1.30** 0.86**
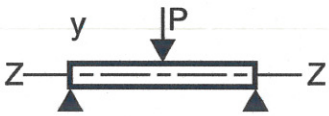	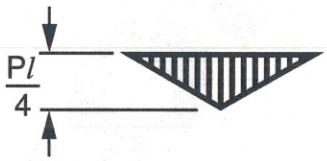	None Full	1.0 0.5	1.35 1.07
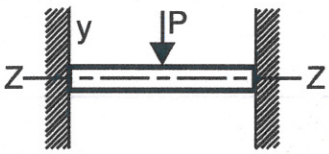	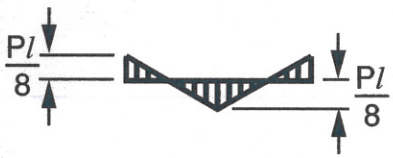	None Full	1.0 0.5	1.70 1.04
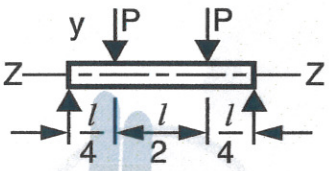	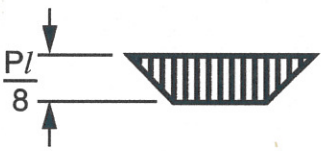	None	1.0	1.04

* All beams are restrained at each end against rotation about the X-axis and displacement in the Y and Z directions. Loads applied at beam centroidal axis.

** Critical Stress based on center moment ($wl^2/24$).

Table taken from *Structural Plastics Design Manual* - Reference 2.

Copyright © 2013 Strongwell Corporation
All Rights Reserved

STRONGWELL

TABLE B-2

COEFFICIENTS K_b - FOR FLEXURAL DEFLECTION

END SUPPORT	TYPE OF LOADING	DEFLECTION AT:	K_b
Simple Support @ Both Ends	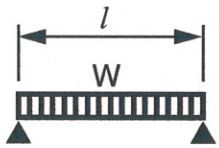	Midspan	0.013
	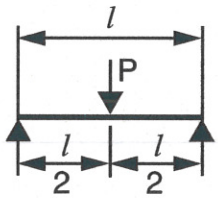	Midspan	0.021
	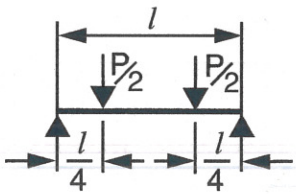	Midspan Quarter Pts.	0.029 0.021
Fixed Support @ Both Ends	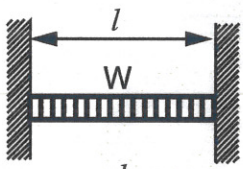	Midspan	0.003
	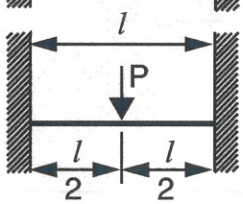	Midspan	0.005
Cantilever	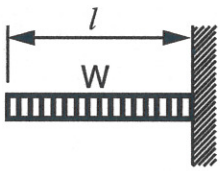	Free End	0.125
	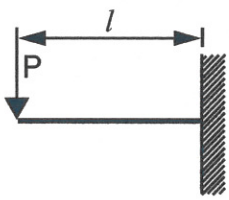	Free End	0.333

Copyright © 2013 Strongwell Corporation
All Rights Reserved

BEAM EQUATIONS FOR LOADS APPLIED IN THE PLANE OF THE WEB

STRESSES FROM APPLIED LOADS

Flexural stress:

$$f_b = \frac{M}{S_x} \quad \text{(B-1)}$$

Shear stress:

$$f_v = \frac{V}{A_w} \quad \text{(B-2)}$$

ULTIMATE AND ALLOWABLE FLEXURAL STRESSES

Laterally Supported EXTREN® W & I Shapes

Ultimate:

$$F_u = \frac{.5E}{(b_f / t_f)^{1.5}} \leq \begin{cases} 30{,}000 \text{ psi (EXTREN® 500/525)} \\ 30{,}000 \text{ psi (EXTREN® 625 > 4")} \\ 33{,}000 \text{ psi (EXTREN® 625} \leq \text{4")} \end{cases} \quad \text{(B-3)}$$

Allowable:

$$F_b = \frac{F_u}{2.5} \quad \text{(B-4)}$$

Laterally Unsupported EXTREN® W & I Shapes

Ultimate:

$$F_u = \frac{C_1}{S_x}\sqrt{N^2 + \frac{d^2B^2}{4}} \leq F_u \quad \text{(B-5)}$$

Where:

$$N = \frac{\pi}{K_y l_u}\sqrt{E\,I_y GJ}$$

And:

$$B = \frac{\pi^2 E\,I_y}{(K_y l_u)^2}$$

Allowable:

$$F_b' = \frac{F_u'}{2.5} \quad \text{(B-6)}$$

K_y and C_1 are taken from Table B-1 and reflect the beam end conditions in the Y-Y Axis and loading on the beam.

Laterally Supported or Laterally Unsupported EXTREN® Square and Rectangular Tubing:

Ultimate:

$$F_u = \frac{E}{16(b/t)^{0.85}} \leq \begin{cases} 30{,}000 \text{ psi (EXTREN® 500/525)} \\ 33{,}000 \text{ psi (EXTREN® 625)} \end{cases} \quad \text{(B-7)}$$

Allowable:

$$F_b = \frac{F_u}{2.5} \quad \text{(B-8)}$$

Copyright © 2013 Strongwell Corporation
All Rights Reserved

BEAM EQUATIONS FOR LOADS APPLIED IN THE PLANE OF THE WEB

Laterally Supported EXTREN® Channels

Ultimate: $F_u = \leq \dfrac{E}{27(b_f / t_f)^{.95}}$ ☒ 30,000 psi (**EXTREN®** 500 & 525) ☒ ☒ 33,000 psi (**EXTREN®** 625) (B-9)

Allowable: $F_b = \dfrac{F_u}{2.5}$ (B-10)

It must be stressed that a non-symmetrical shape such as a channel should only be used when the flanges are adequately laterally supported. Current industry experience has shown that satisfactory performance from channels has been achieved when the compression flange was laterally supported with connecting members at the following spacings:

— 24" maximum for 3" and 4" channels
— 36" maximum for 5" and 6" channels
— 48" maximum for 8" channels and larger

ALLOWABLE SHEAR STRESSES

EXTREN® structural shapes:

$$F_v = \frac{4500}{3.0} = 1500 \text{ psi} \quad \text{(B-11)}$$

EXTREN® large rectangular shapes:

$$F_v = \frac{4000}{3.0} = 1333 \text{ psi} \quad \text{(B-12)}$$

DEFLECTIONS

EXTREN® structural shapes with uniform loads, w:

$$\Delta = K_b \frac{wl^4}{EI_x} + K_v \frac{wl^2}{A_w G} \quad \text{(B-13)}$$

EXTREN® structural shapes with concentrated loads, P:

$$\Delta = K_b \frac{Pl^3}{EI_x} + K_v \frac{Pl}{A_w G} \quad \text{(B-14)}$$

K_b is taken from Table B-2 and reflects the beam end conditions.

$K_v = 0.35$. This value actually varies slightly depending on load distribution, end constraints and Poisson's Ratio, but the given value will be adequate for most cases with supports at both ends of the beam.

$K_v = 1.2$ for cantilever beams.

For additional information, see *Mechanics of Materials* by Timoshenko & Gere.

Copyright © 2013 Strongwell Corporation
All Rights Reserved

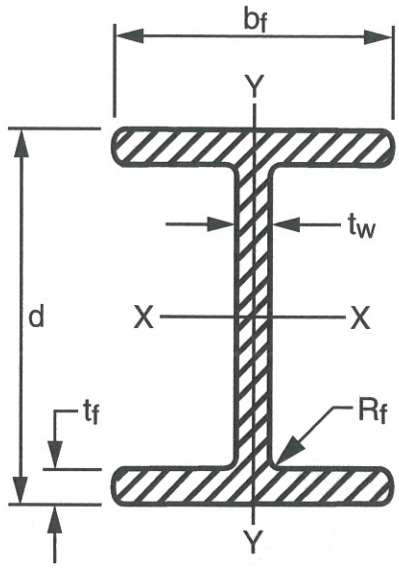

EXTREN® I-SHAPES

PHYSICAL PROPERTIES							SECTION PROPERTIES						DESIGN PROPERTIES		
SIZE				A	NOM. Wt/ft	R_f	AXIS X—X			AXIS Y—Y			$\frac{b_f}{t_f}$	A_w	J
d	b_f	t_w	t_f				I	S	r	I	S	r			
in	in	in	in	in^2	lbs	in	in^4	in^3	in	in^4	in^3	in		in^2	in^4
2	1	1/8	1/8	0.47	0.34	1/16	0.28	0.28	0.77	0.02	0.04	0.21	8.00	0.22	0.002
3	1-1/2	1/4	1/4	1.38	1.11	1/8	1.75	1.17	1.13	0.14	0.19	0.32	6.00	0.63	0.029
4	2	1/4	1/4	1.89	1.48	1/8	4.40	2.20	1.54	0.34	0.34	0.43	8.00	0.88	0.039
5-1/2	2-1/2	1/4	1/4	2.48	1.95	1/8	11.12	4.04	2.12	0.62	0.50	0.50	10.00	1.25	0.055
6	3	1/4	1/4	2.88	2.31	1/8	15.92	5.32	2.36	1.13	0.76	0.63	12.00	1.38	0.060
6	3	3/8	3/8	4.23	3.39	3/16	22.30	7.43	2.31	1.71	1.14	0.64	8.00	1.97	0.198
8	4	3/8	3/8	5.73	4.61	3/16	55.45	13.85	3.12	4.03	2.02	0.84	10.67	2.72	0.268
8	4	1/2	1/2	7.51	6.03	1/4	70.62	17.65	3.08	5.41	2.71	0.85	8.00	3.50	0.625
10	5	3/8	3/8	7.23	5.78	3/16	111.67	22.33	3.93	7.85	3.14	1.04	13.33	3.47	0.338
10	5	1/2	1/2	9.51	7.58	1/4	143.48	28.70	3.90	10.51	4.22	1.06	10.00	4.50	0.788
12	6	1/2	1/2	11.51	9.24	1/4	254.10	42.30	4.70	18.11	6.05	1.26	12.00	5.50	0.958
18	4-1/2	3/8	1/2	11.09	8.34	1/2	513.30	57.00	6.80	7.67	3.41	0.83	9.00	6.38	0.674
24	7-1/2	3/8	3/4	19.90	16.10	1/2	1903.40	158.60	9.80	52.83	14.09	1.63	10.00	8.43	2.510

Copyright © 2015 Strongwell Corporation
All Rights Reserved

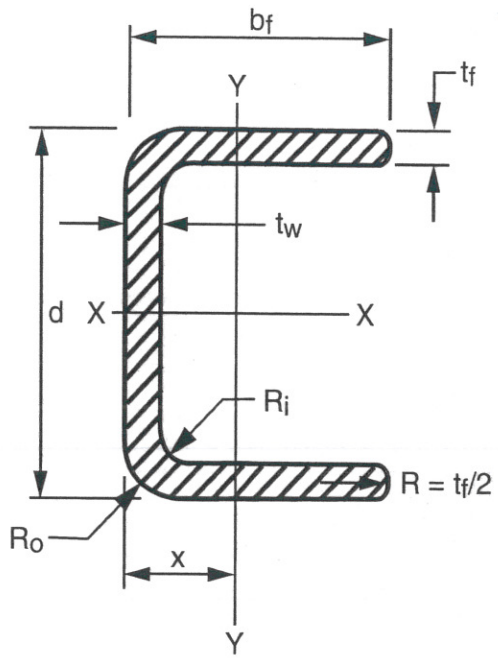

EXTREN® CHANNELS

PHYSICAL PROPERTIES								SECTION PROPERTIES							DESIGN PROPERTIES		
SIZE				A	NOM. Wt/ft	R_i	R_o	AXIS X—X			AXIS Y—Y						
d	b_f	t_w	t_f					I	S	r	I	S	r	x	$\frac{b_f}{t_f}$	A_w	J
in	in	in	in	in^2	lbs	in	in	in^4	in^3	in	in^4	in^3	in	in		in^2	in^4
1-1/2	1	3/16	3/16	0.59	0.46	1/8	5/16	0.18	0.24	0.56	0.04	0.06	0.26	0.35	5.33	0.21	0.010
1-1/2	1-1/2	1/4	1/4	1.00	0.75	1/8	3/8	0.32	0.42	0.56	0.22	0.24	0.38	0.59	6.00	0.25	0.020
2	9/16	1/8	1/8	0.34	0.26	1/16	3/16	0.18	0.18	0.71	0.01	0.02	0.15	0.15	4.50	0.22	0.001
2	7/8	1/4	1/4	0.80	0.65	1/8	1/8	0.40	0.40	0.70	0.03	0.13	0.21	0.26	3.50	0.38	0.016
2-5/8	1-1/4	1/8	3/16	0.75	0.62	1/8	3/16	0.82	0.62	1.04	0.12	0.14	0.40	0.42	6.67	0.28	0.007
3	7/8	1/4	1/4	1.00	0.77	1/8	3/8	1.15	0.77	1.04	0.06	0.09	0.23	0.25	3.50	0.62	0.020
3	1	3/16	3/16	0.87	0.68	1/8	5/16	1.03	0.68	1.09	0.07	0.09	0.28	0.27	5.33	0.49	0.010
3	1-1/2	1/4	1/4	1.31	1.05	1/8	3/8	1.81	1.21	1.18	0.25	0.53	0.44	0.47	6.00	0.63	0.027
3-1/2	1-1/2	3/16	3/16	1.11	0.88	1/8	5/16	1.91	1.09	1.31	0.19	0.18	0.41	0.42	8.00	0.59	0.013
4	1-1/16	1/8	1/8	0.71	0.58	1/8	1/4	1.55	0.78	1.45	0.06	0.08	0.29	0.23	8.50	0.47	0.004
4	1-1/8	1/4	1/4	1.38	1.11	1/8	3/8	2.87	1.43	1.41	0.13	0.15	0.30	0.30	4.50	0.88	0.030
4	1-3/8	3/16	3/16	1.16	0.94	1/8	5/16	2.62	1.31	1.48	0.19	0.18	0.40	0.35	7.33	0.68	0.014
5	1-3/8	1/4	1/4	1.76	1.40	1/8	3/8	5.78	2.31	1.79	0.25	0.24	0.37	0.34	5.50	1.12	0.040
5-1/2	1-1/2	3/16	3/16	1.49	1.19	1/8	5/16	5.80	2.11	1.98	0.22	0.19	0.38	0.34	8.00	0.96	0.018
5-1/2	1-1/2	1/4	1/4	2.00	1.55	1/8	5/16	7.78	2.83	1.97	0.33	0.29	0.41	0.36	6.00	1.25	0.042
6	1-5/8	1/4	1/4	2.13	1.68	1/8	3/8	10.22	3.41	2.16	0.43	0.35	0.44	0.38	6.50	1.38	0.050
6	1-11/16	3/8	3/8	3.23	2.46	3/16	9/16	14.55	4.85	2.12	0.54	0.44	0.41	0.44	4.50	1.97	0.150
8	2-3/16	1/4	1/4	2.97	2.32	1/8	3/8	25.22	6.31	2.91	1.10	0.65	0.61	0.49	8.75	1.88	0.060 — 30'
8	2-3/16	3/8	3/8	4.36	3.41	3/16	9/16	35.75	8.94	2.87	1.42	0.86	0.57	0.53	5.83	2.72	0.200
10	2-3/4	1/2	1/2	7.25	5.50	3/8	3/4	92.46	18.49	3.57	3.99	1.93	0.74	0.68	5.50	4.50	0.600
12	3	1/2	1/2	8.17	6.30	3/8	7/8	142.8	23.8	4.18	5.07	2.20	0.79	0.70	6.00	5.50	0.750
14	3-1/2	3/4	3/4	14.62	11.21	3/8	1-1/8	352.74	50.39	4.91	12.16	4.62	0.91	0.87	4.67	9.38	2.742
18	2-3/16	3/16	3/8	4.14	3.88	1/16	1/4	151.02	16.78	6.04	1.00	0.55	0.53	0.29	11.67	3.31	0.049
24	3	1/4	1/4	7.60	5.85	3/8	1/8	484.33	40.36	7.98	3.56	1.34	0.68	0.35	11.54	6.10	0.173

Copyright © 2015 Strongwell Corporation
All Rights Reserved

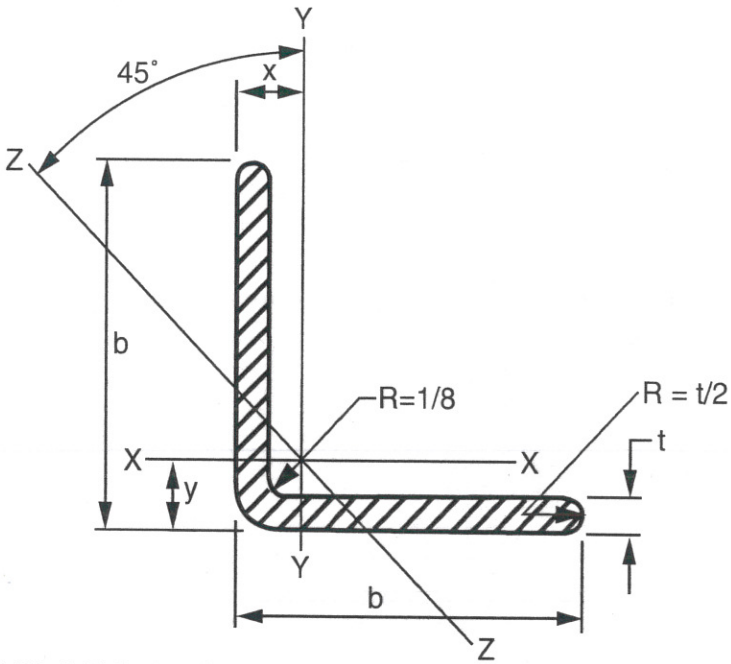

EXTREN® EQUAL LEG ANGLES

PHYSICAL PROPERTIES				SECTION PROPERTIES						DESIGN PROPERTIES	
SIZE		A	NOM. Wt/ft	AXIS X—X or Y—Y				AXIS Z–Z		b/t	J
b	t			I	S	r	x or y	I	r		
in	in	in²	lbs	in⁴	in³	in	in	in⁴	in		in⁴
1	1/8	0.22	0.17	0.02	0.03	0.30	0.29	0.01	0.19	8.00	0.001
1-1/4	1/8	0.29	0.22	0.04	0.05	0.37	0.35	0.02	0.24	10.00	0.002
1-1/4	3/16	0.42	0.35	0.06	0.07	0.37	0.37	0.03	0.24	6.67	0.005
1-1/2	1/8	0.35	0.28	0.07	0.07	0.45	0.41	0.03	0.29	12.00	0.002
1-1/2	3/16	0.51	0.41	0.11	0.10	0.45	0.44	0.04	0.29	8.00	0.006
1-1/2	1/4	0.67	0.50	0.13	0.13	0.44	0.46	0.06	0.29	6.00	0.007
2	1/8	0.48	0.37	0.19	0.13	0.63	0.55	0.08	0.46	16.00	0.002
2	3/16	0.70	0.56	0.27	0.19	0.61	0.56	0.11	0.39	10.67	0.008
2	1/4	0.92	0.73	0.34	0.24	0.60	0.58	0.14	0.39	8.00	0.020
3	1/4	1.42	1.13	1.18	0.54	0.91	0.82	0.49	0.58	12.00	0.030
3	3/8	2.09	1.66	1.70	0.80	0.90	0.87	0.70	0.58	8.00	0.090
4	1/4	1.92	1.54	2.94	1.00	1.23	1.07	1.21	0.79	16.00	0.040
4	3/8	2.84	2.31	4.26	1.48	1.22	1.12	1.75	0.78	10.67	0.134
4	1/2	3.75	2.86	5.56	1.97	1.22	1.18	2.29	0.78	8.00	0.312
5	1/2	4.71	3.68	11.34	3.35	1.55	1.61	4.87	1.02	10.00	0.390
6	1/4	2.94	2.35	10.70	2.43	1.91	1.59	4.36	1.22	24.00	0.061
6	3/8	4.34	3.44	14.85	3.38	1.85	1.60	6.07	1.18	16.00	0.204
6	1/2	5.72	4.64	19.38	4.46	1.84	1.66	7.92	1.17	12.00	0.480

– 24'

– 30'

Copyright © 2015 Strongwell Corporation
All Rights Reserved

Basic Load Cases

	BLC Description	Category	X Gravity	Y Gravity	Z Gravity	Joint	Point	Distributed	Area(Me...	Surface(P...
1	DL	DL						3	1	
2	LL	LL							1	
3	WL	WL				6		1		
4	BLC 1 Transient Area...	None						142		
5	BLC 2 Transient Area...	None						150		

Load Combinations

	Description	Solve	PDelta	SR...	BLC	Factor	BLC	Factor	BLC	Factor	BLC	Factor	BLC	Factor	BLC	Factor	BLC	Factor	BLC	Factor
1	IBC 16-8	Yes			DL	1														
2	IBC 16-9	Yes			DL	1	LL	1	LLS	1										
3	IBC 16-12 (a)	Yes			DL	1	WL	.6												
4	IBC 16-13 (a)	Yes			DL	1	WL	.45	LL	.75	LLS	.75								
5	IBC 16-15	Yes			DL	.6	WL	.6												

Envelope Joint Reactions

	Joint		X [k]	LC	Y [k]	LC	Z [k]	LC	MX [k-ft]	LC	MY [k-ft]	LC	MZ [k-ft]	LC
1	N1	max	0	1	1.744	2	.34	3	0	1	0	1	0	1
2		min	0	1	.207	5	0	1	0	1	0	1	0	1
3	N3	max	0	1	1.744	2	.274	3	0	1	0	1	0	1
4		min	0	1	.207	5	0	1	0	1	0	1	0	1
5	N5	max	0	1	2.688	2	.136	3	0	1	0	1	0	1
6		min	0	1	.293	5	0	1	0	1	0	1	0	1
7	N2	max	0	1	1.744	2	.34	3	0	1	0	1	0	1
8		min	0	1	.207	5	0	1	0	1	0	1	0	1
9	N6	max	0	1	2.688	2	.136	3	0	1	0	1	0	1
10		min	0	1	.293	5	0	1	0	1	0	1	0	1
11	N4	max	0	1	1.744	2	.274	3	0	1	0	1	0	1
12		min	0	1	.207	5	0	1	0	1	0	1	0	1
13	N13	max	0	1	0	1	0	1	0	1	0	1	0	1
14		min	0	1	0	1	0	1	0	1	0	1	0	1
15	N14	max	0	1	0	1	0	1	0	1	0	1	0	1
16		min	0	1	0	1	0	1	0	1	0	1	0	1
17	N15	max	0	1	0	1	0	1	0	1	0	1	0	1
18		min	0	1	0	1	0	1	0	1	0	1	0	1
19	Totals:	max	0	1	12.354	2	1.5	3						
20		min	0	1	1.413	5	0	1						

Envelope Member Section Forces

	Member	Sec		Axial[k]	LC	y Shear...	LC	z Shear...	LC	Torque[...	LC	y-y Mo...	LC	z-z Mo...	LC
1	M1	1	max	0	1	1.685	2	.202	3	0	1	0	1	-.001	5
2			min	0	1	.201	5	0	1	0	1	0	1	-.016	2
3		2	max	0	1	.935	2	.162	3	0	1	.59	3	-.779	5
4			min	0	1	.098	5	0	1	0	1	0	1	-6.59	2
5		3	max	0	1	-.005	5	.006	3	0	1	.98	3	-1.038	5
6			min	0	1	-.059	2	0	1	0	1	0	1	-8.779	2
7		4	max	0	1	-.098	5	0	1	0	1	.59	3	-.779	5
8			min	0	1	-.935	2	-.162	3	0	1	0	1	-6.59	2
9		5	max	0	1	-.201	5	0	1	0	1	0	1	-.001	5
10			min	0	1	-1.685	2	-.202	3	0	1	0	1	-.016	2
11	M2	1	max	0	1	1.685	2	.136	3	0	1	0	1	-.001	5
12			min	0	1	.201	5	0	1	0	1	0	1	-.016	2
13		2	max	0	1	.935	2	.136	3	0	1	.68	3	-.779	5

Envelope Member Section Forces (Continued)

	Member	Sec		Axial[k]	LC	y Shear...	LC	z Shear...	LC	Torque[...	LC	y-y Mo...	LC	z-z Mo...	LC
14			min	0	1	.109	5	0	1	0	1	0	1	-6.59	2
15		3	max	0	1	.059	2	.072	3	0	1	1.04	3	-1.038	5
16			min	0	1	.005	5	0	1	0	1	0	1	-8.779	2
17		4	max	0	1	-.109	5	0	1	0	1	.68	3	-.779	5
18			min	0	1	-.935	2	-.136	3	0	1	0	1	-6.59	2
19		5	max	0	1	-.201	5	0	1	0	1	0	1	-.001	5
20			min	0	1	-1.685	2	-.136	3	0	1	0	1	-.016	2
21	M3	1	max	0	1	2.57	2	.136	3	0	1	0	1	.031	2
22			min	0	1	.282	5	0	1	0	1	0	1	.003	5
23		2	max	0	1	1.47	2	.136	3	0	1	.68	3	-1.101	5
24			min	0	1	.158	5	0	1	0	1	0	1	-10.103	2
25		3	max	0	1	-.011	5	0	1	0	1	1.04	3	-1.468	5
26			min	0	1	-.118	2	-.072	3	0	1	0	1	-13.47	2
27		4	max	0	1	-.158	5	0	1	0	1	.68	3	-1.101	5
28			min	0	1	-1.47	2	-.136	3	0	1	0	1	-10.103	2
29		5	max	0	1	-.282	5	0	1	0	1	0	1	.031	2
30			min	0	1	-2.57	2	-.136	3	0	1	0	1	.003	5

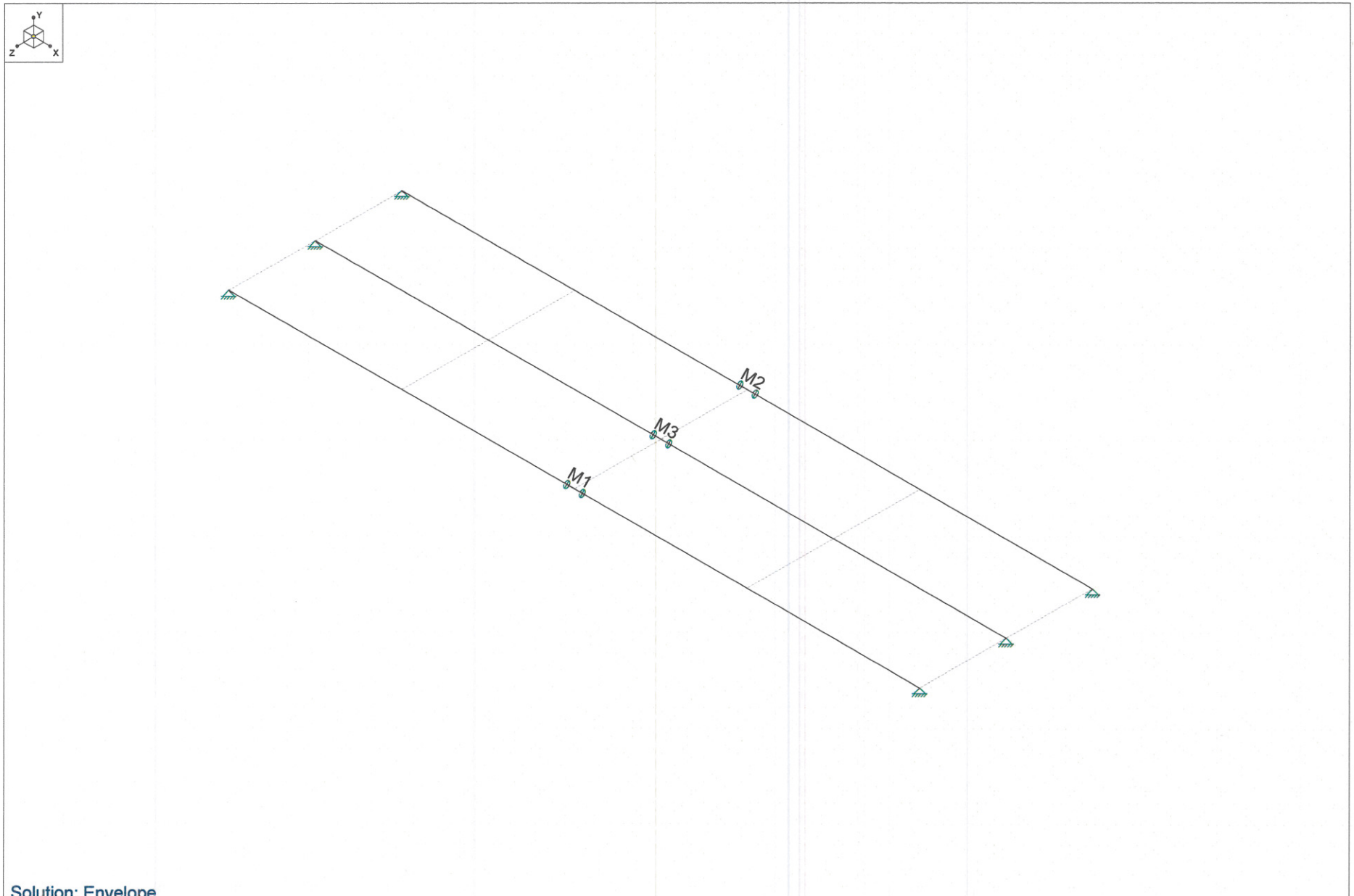

Solution: Envelope

STATE PARKS	20' SPAN FRP - LOW PROFILE	SK - 1
WALLER		Feb 10, 2016 at 10:33 AM
		20_SPAN_FRP.r3d

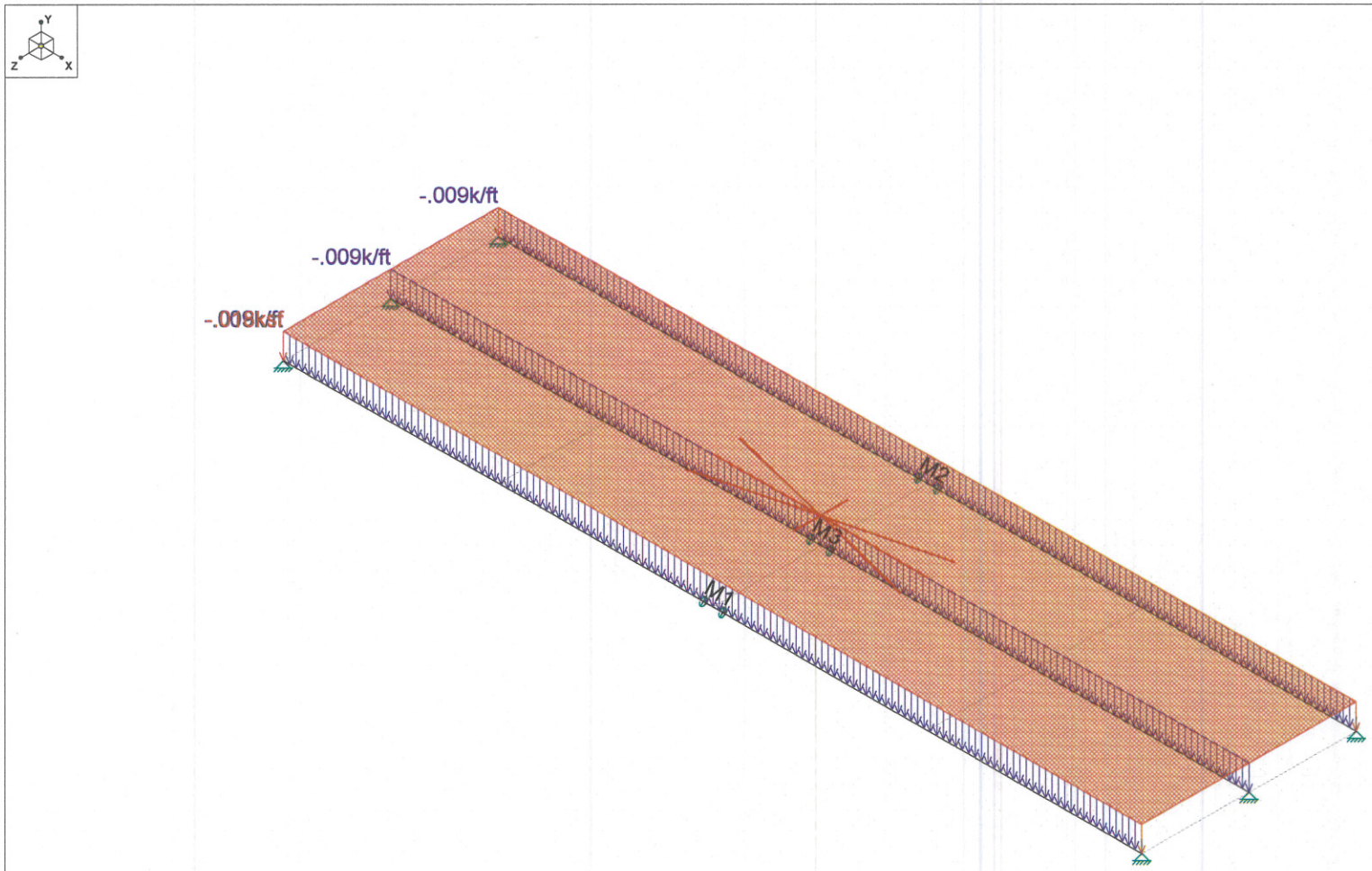

Loads: BLC 1, DL
Solution: Envelope

STATE PARKS	20' SPAN FRP - LOW PROFILE	SK - 2
WALLER		Feb 10, 2016 at 10:49 AM
		20_SPAN_FRP.r3d

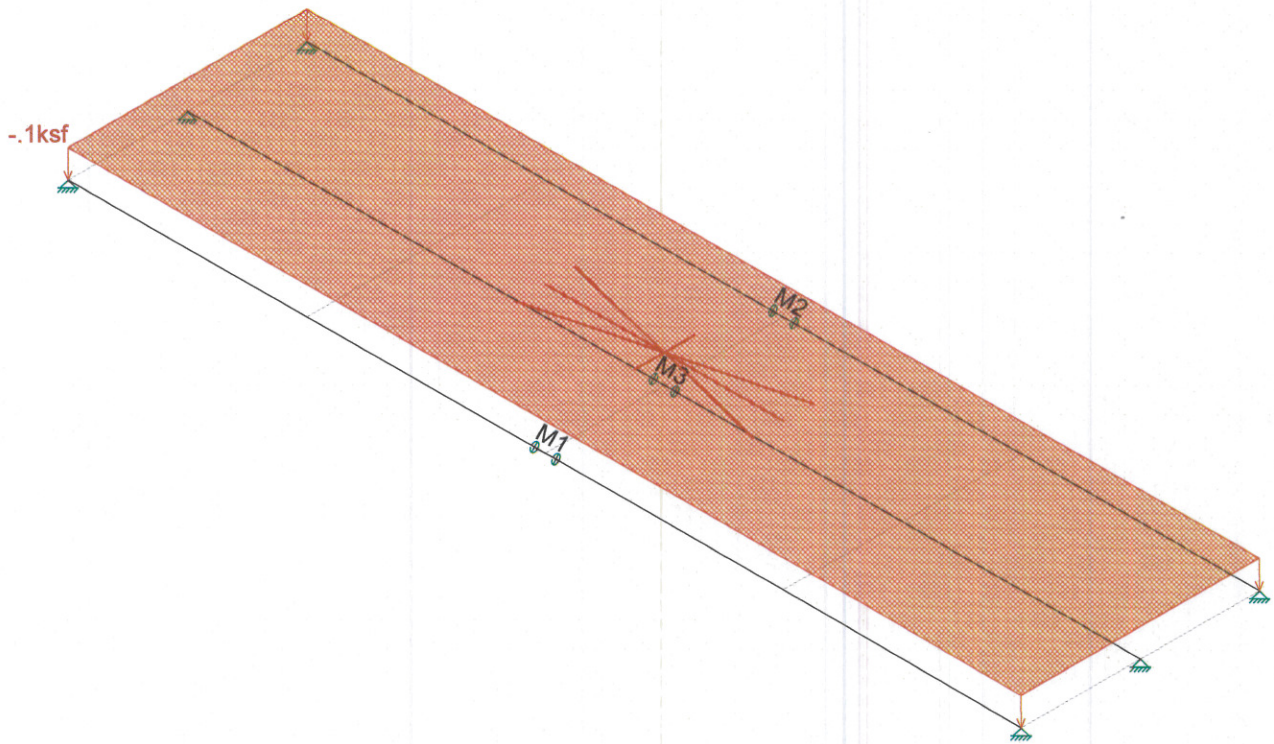

Loads: BLC 2, LL
Solution: Envelope

STATE PARKS	20' SPAN FRP - LOW PROFILE	SK - 3
WALLER		Feb 10, 2016 at 10:34 AM
		20_SPAN_FRP.r3d

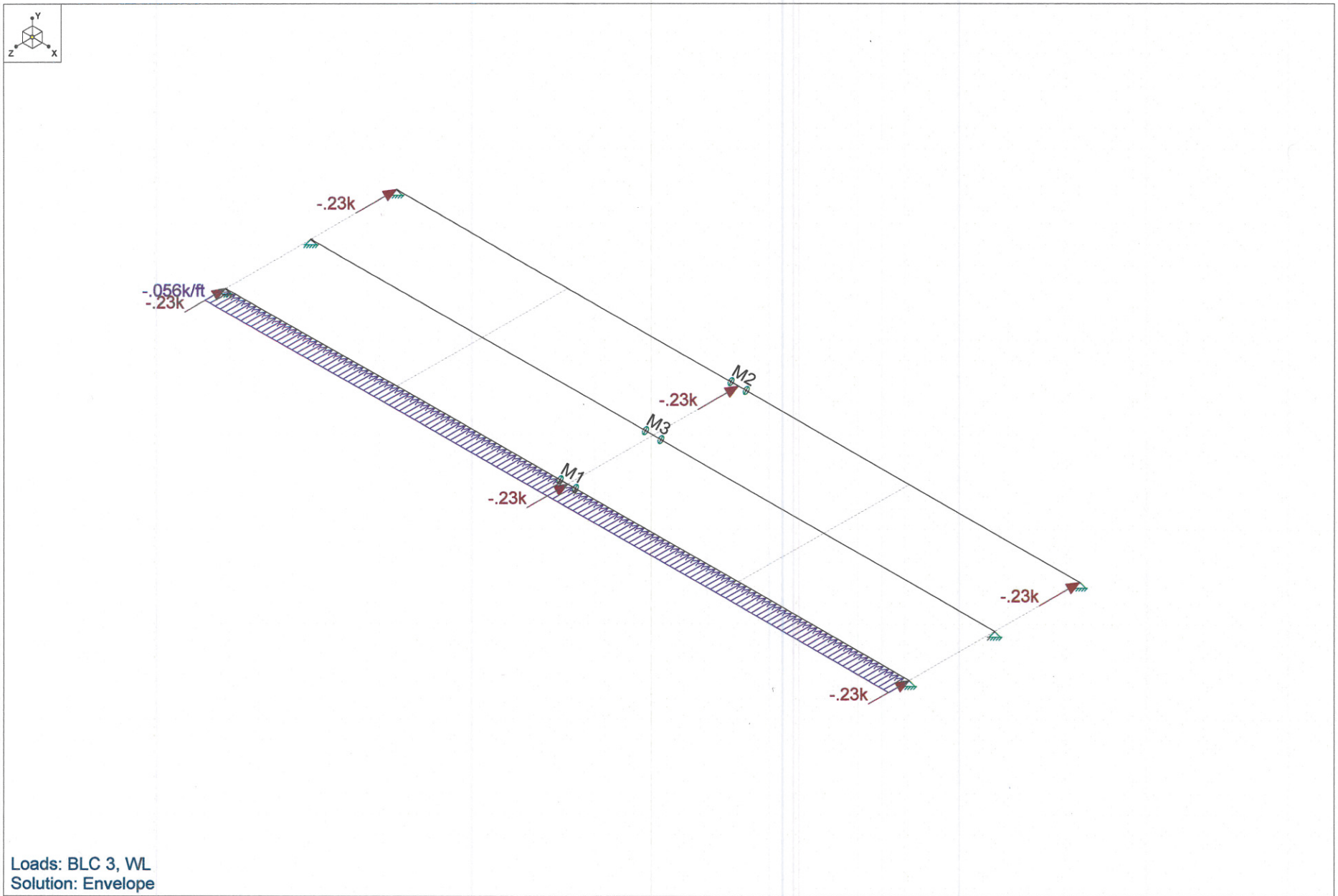

Loads: BLC 3, WL
Solution: Envelope

STATE PARKS	20' SPAN FRP - LOW PROFILE	SK - 4
WALLER		Feb 10, 2016 at 10:34 AM
		20_SPAN_FRP.r3d